BEYOND '25 4P PARTS MANUAL

(866) 542-8677 support@bintelli.com

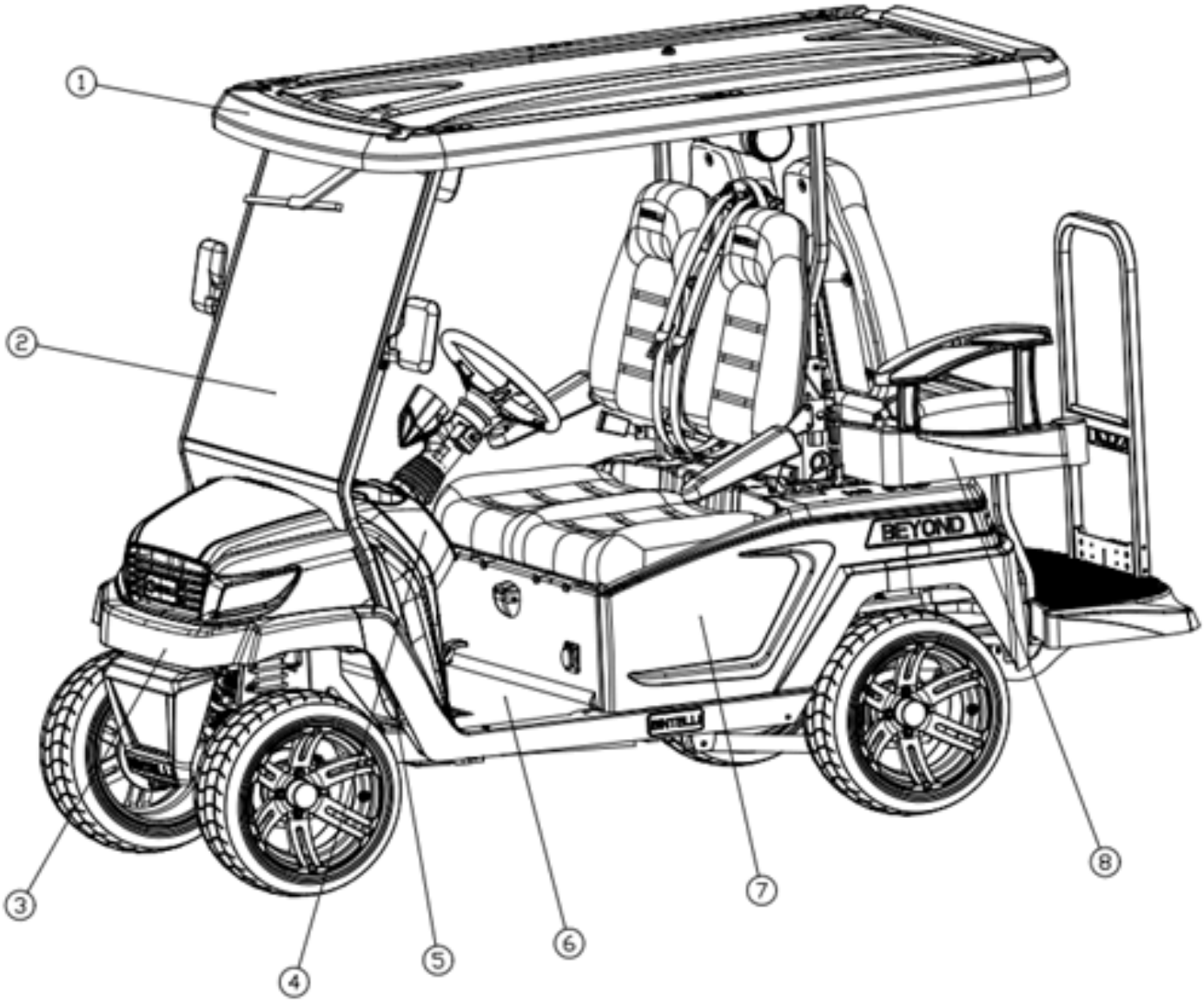

BEYOND 4P PARTS	
1	ROOF
2	WINDSHIELD
3	FRONT BODY PANEL
4	DASH PANEL
5	CHASSIS
6	FRONT UNDERBODY
7	REAR BODY PANEL
8	BACKWARD SEAT

Menu

Roof....3
Roof Continued....5
Windshield....7
Windshield Continued....9
Front Body Panel....11
Front Body Panel Continued....13
Front Body Panel Continued....15
Dash Panel....17
Dash Panel Continued....19
Chassis....21
Chassis Continued....23
Chassis Continued....25
Front Axle....27
Front Axle LH....29
Front Axle LH Continued....31
Front Axle RH....33
Front Axle RH Continued....35
Rear Axle Tube....37
Rear Axle Tube Continued....39
Leaf Spring Assembly....41
Front Underbody....43
Front Underbody Continued....45
Rear Body Panel....47
Rear Body Panel Continued....49
Rear Body Panel Continued....51
Backward Seat....53
Backward Seat Continued....55
Backward Seat Continued....57
Backward Seat Continued....59
Backward Seat Continued....61
Four Wheel Disc Brake....63

ROOF PARTS DIAGRAM

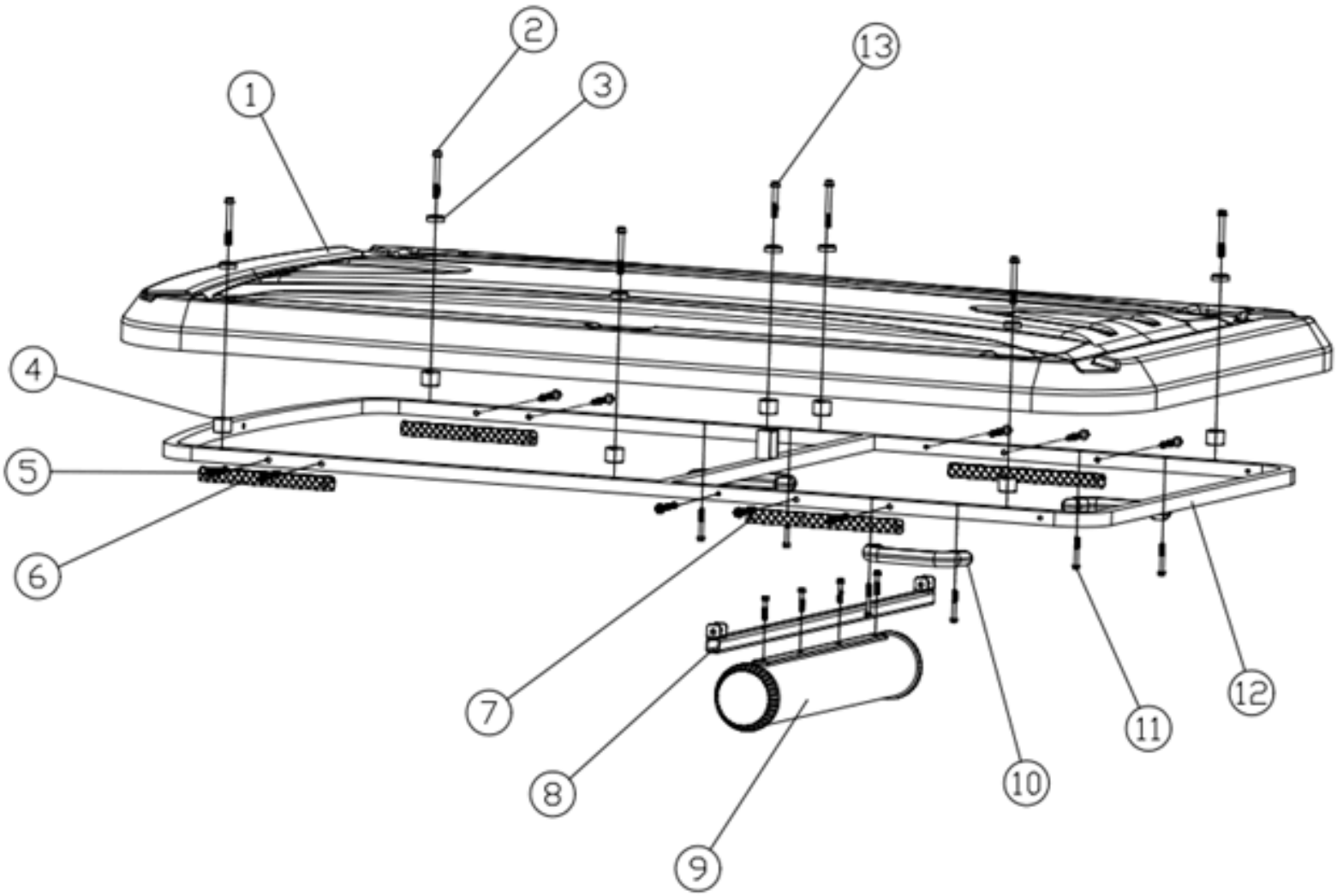

ROOF PARTS				
NO.	DESCRIPTION	PART NUMBER	PCS	MEMO
1	2+2 Roof (NOTE COLOR WHEN ORDERING)	3.06.01.03.02.001-OceanBlue 3.06.01.03.02.001-Navy 3.06.01.03.02.001-'25Orange 3.06.01.03.02.001-Mint 3.06.01.03.02.001-HydroBlue 3.06.01.03.02.001-Red 3.06.01.03.02.001-White 3.06.01.03.02.001-Titanium 3.06.01.03.02.001-Black	1	
2	Stainless Steel Screw M8*72	4.03.03.03.041	8	
3	Roof Gasket (Up)	4.05.01.42.016	9	
4	Roof Gasket (Down)	4.05.01.42.017	9	
5	Stainless Steel Screw M8*70	4.03.03.04.031	8	
6	Roof plastic gasket	4.05.04.03.081	2	
7	Roof Gasket 24*300	4.05.04.03.082	2	

ROOF PARTS DIAGRAM CONTNINUED

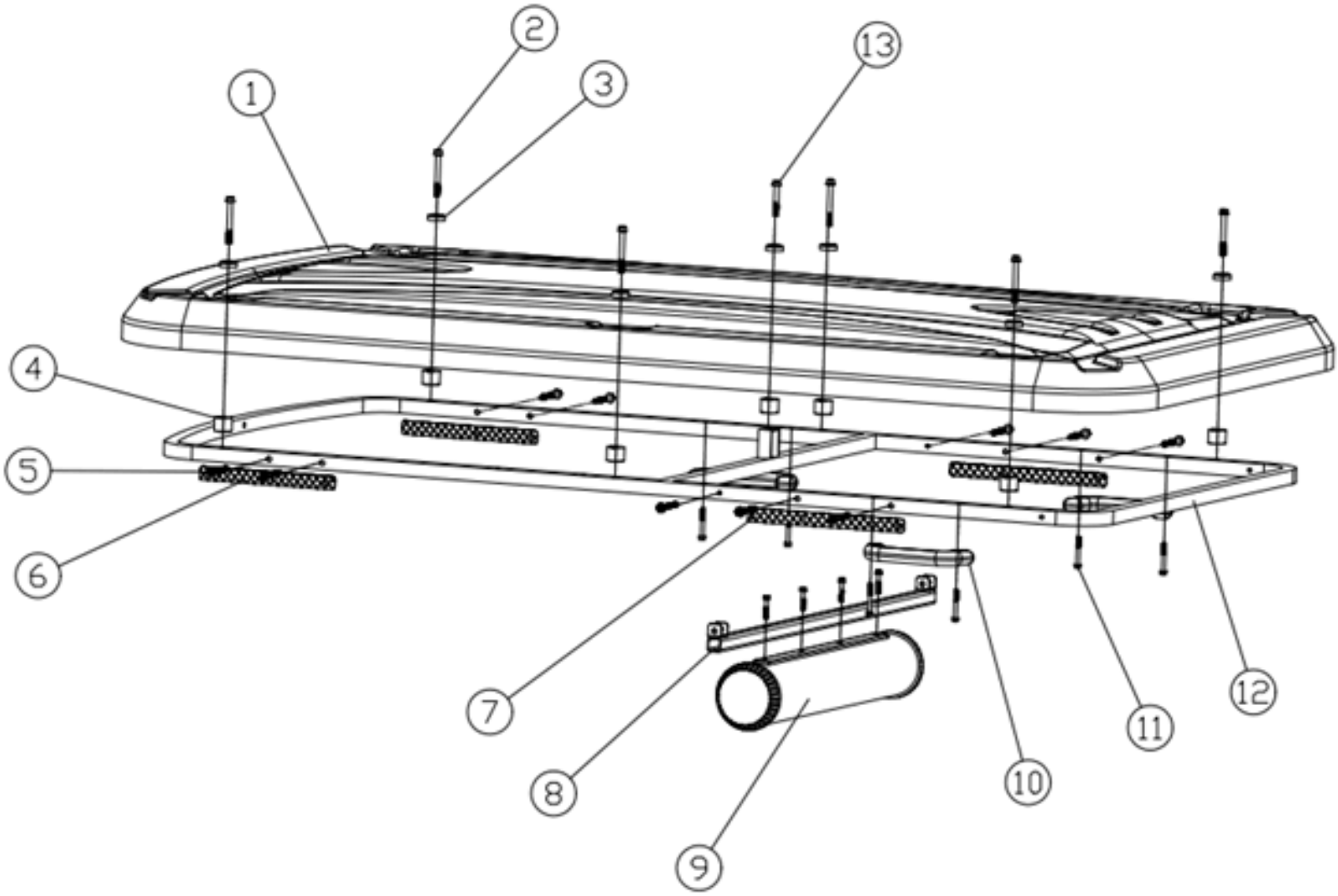

ROOF PARTS CONTINUED				
NO.	DESCRIPTION	PART NUMBER	PCS	MEMO
8	Sound Bar Bracket/aluminum	3.02.01.33.186	1	
9	Sound Bar	-	1	**NOT AVALIABLE AS A SPARE PART**
10	Handle	4.05.01.09.007	3	
11	Flange Screw M6*40	4.03.02.01.008	10	
12	4 Roof Frame / Alu	3.02.01.02.078	1	
13	Stainless Steel Screw M8*50	4.03.03.04.028	1	

WINDSHIELD PARTS DIAGRAM

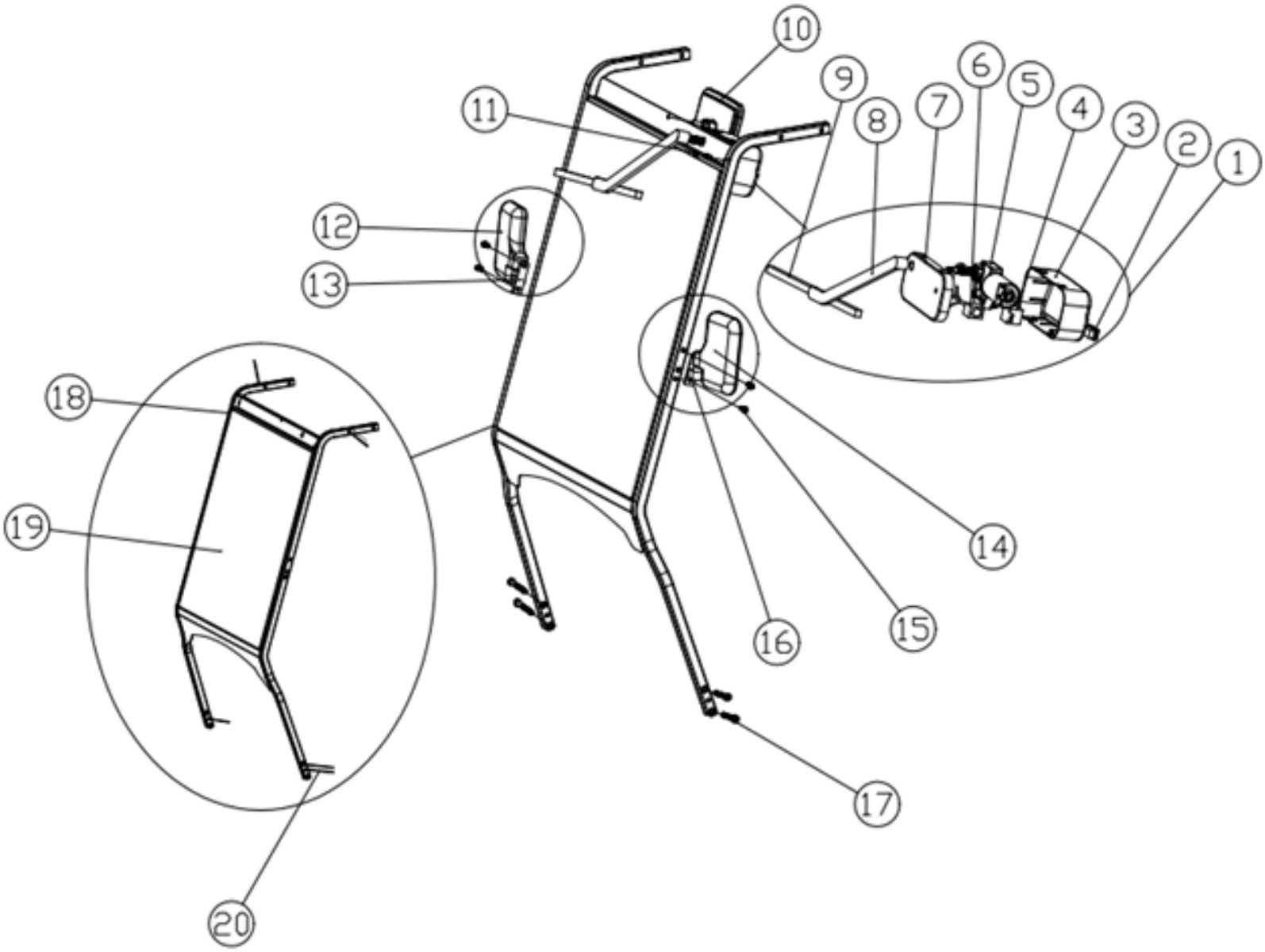

WINDSHIELD PARTS				
NO.	DESCRIPTION	PART NUMBER	PCS	MEMO
1	Wiper Assembly	*FULL ASSEMBLY*	1	ZD1430R 12V90°
2	Wiper Switch	4.04.02.01.063	1	
3	Wiper Motor Tray	4.05.01.03.017	1	
4	Relay 12V 30A	4.04.02.05.016	1	
5	Wiper Motor/12V	4.04.02.03.013	1	40W, 90°
6	Wiper Motor Harness	4.04.03.10.031	1	
7	Wiper Motor Installation Seat	4.05.01.03.025	1	
8	Wiper Arm	***INCLUDED WITH 4.04.14.02.024***	1	M Type
9	Wiper Blade	4.04.14.02.024	1	A Type
10	Standard Center Mirror	4.05.01.13.006	1	

WINDSHIELD PARTS DIAGRAM CONTINUED

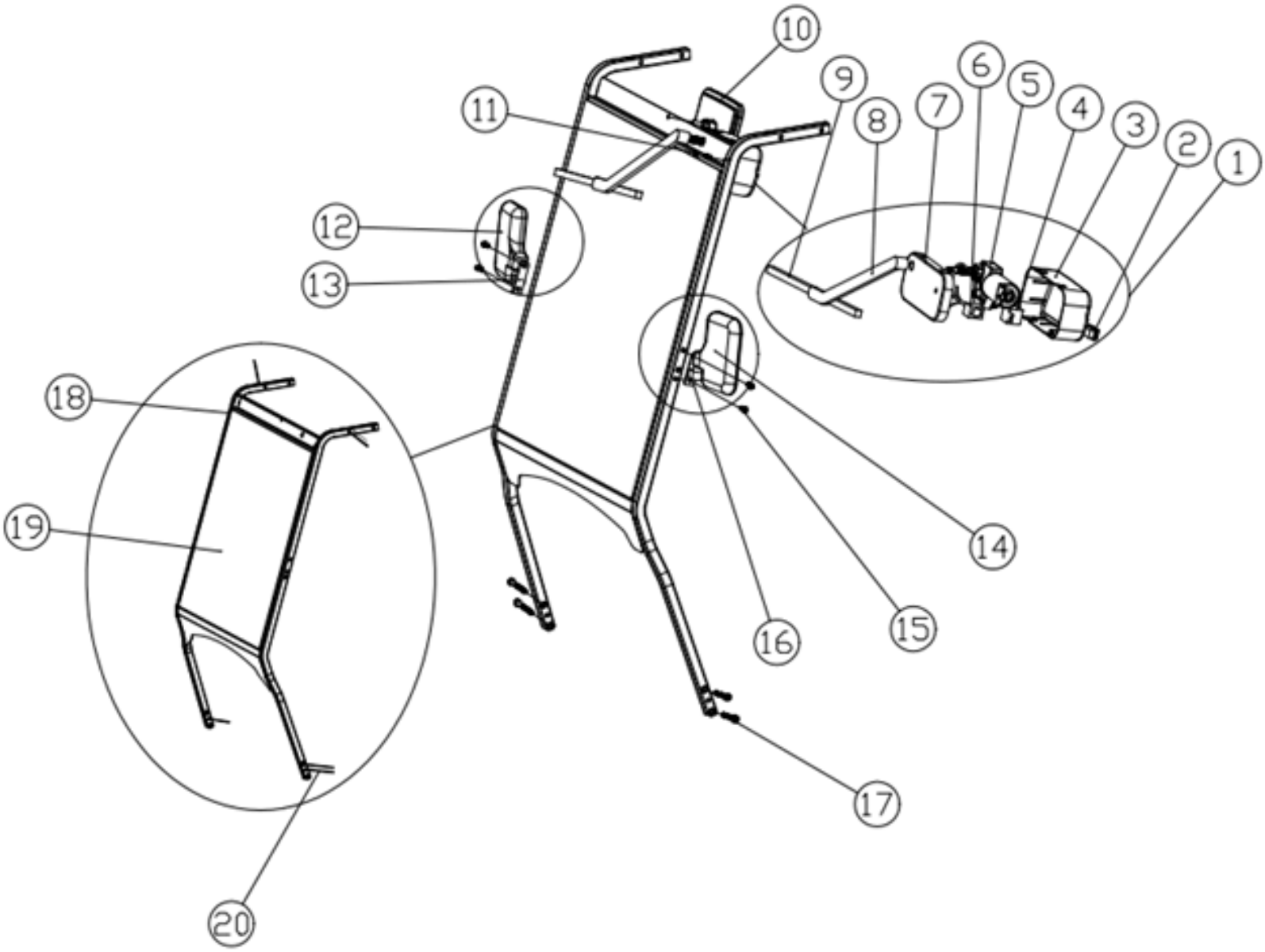

WINDSHIELD PARTS CONTINUED

NO.	DESCRIPTION	PART NUMBER	PCS	MEMO
11	Stainless Steel Bolt M6*16	4.03.03.04.018	1	
12	Side Mirror / RH	4.05.01.13.003	1	
13	Side Mirror Support Base/RH	***INCLUDED WITH 4.05.01.13.003***	1	M Type
14	Side Mirror / LH	4.05.01.13.002	1	
15	Stainless Steel Bolt M6*25	4.03.03.04.020	4	
16	Side Mirror Support Base/LH	***INCLUDED WITH 4.05.01.13.002***	1	M Type
17	Flange Screws M8*85	4.03.02.01.026	4	
18	Laminated Windshield Frame Assembly	***COMES ASSEMBLIED AS 2.06.02.01.023***	1	D-AM4
19	Laminated Windshield	***COMES ASSEMBLIED AS 2.06.02.01.023***	1	M4 870*800
20	Wiper motor power cord	2.01.02.11.054	1	

FRONT BODY PANEL PARTS DIAGRAM

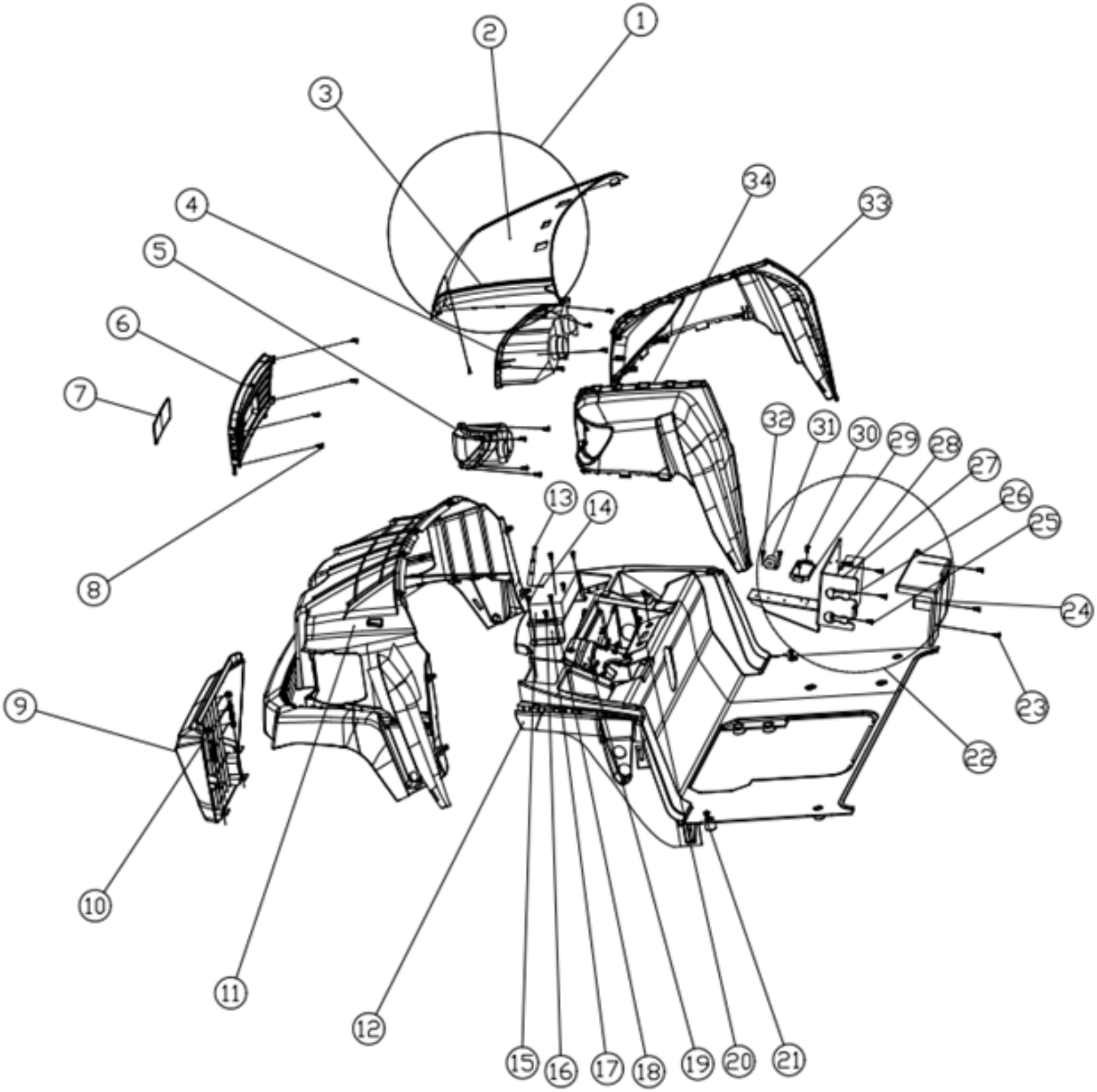

FRONT BODY PANEL PARTS

NO.	DESCRIPTION	PART NUMBER	PCS	MEMO
1	Beyond Front Cowl Assembly	***FULL ASSEMBLY***	1	M Type
2	Front Cowl *NOTE COLOR WHEN ORDERING*	4.05.01.33.005-Ocean Blue 4.05.01.33.005-Navy Blue 4.05.01.33.005-'25Orange 4.05.01.33.005-HydroBlue 4.05.01.33.005-Mint 4.05.01.33.005-Red 4.05.01.33.005-White 4.05.01.33.005-Titanium 4.05.01.33.005-Black	1	M Type
3	Door Belt Sticker	4.05.03.01.040	2	
4	LED Light / RH	4.04.14.01.003	1	M Type
5	LED Light / LH	4.04.14.01.002	1	M Type
6	Centre Grill	4.05.01.33.006	1	M Type
7	Logo (Grill)	4.05.03.01.009	1	M Type
8	Inner hexagon Large Flat Head Self-Tapping Screws M5*16	4.03.03.06.024	16	
9	Bumper/Plastic	4.05.01.41.018	1	BN
10	Flange Screw M8*95	4.03.02.01.028	2	
11	Front Brow	4.05.01.33.007	1	M Type
12	Front Underbody	4.05.01.01.043	1	A Type
13	Radio Cable	4.04.03.10.021	1	0.6M
14	Large flat cross head self tapping screw M4*16	4.03.03.07.012	4	
15	Power Steering DC/DC Converter	4.04.01.13.033	1	
16	Flat Head Self-Tapping Screw M5*16	4.03.03.06.024	1	

FRONT BODY PANEL PARTS DIAGRAM CONTINED

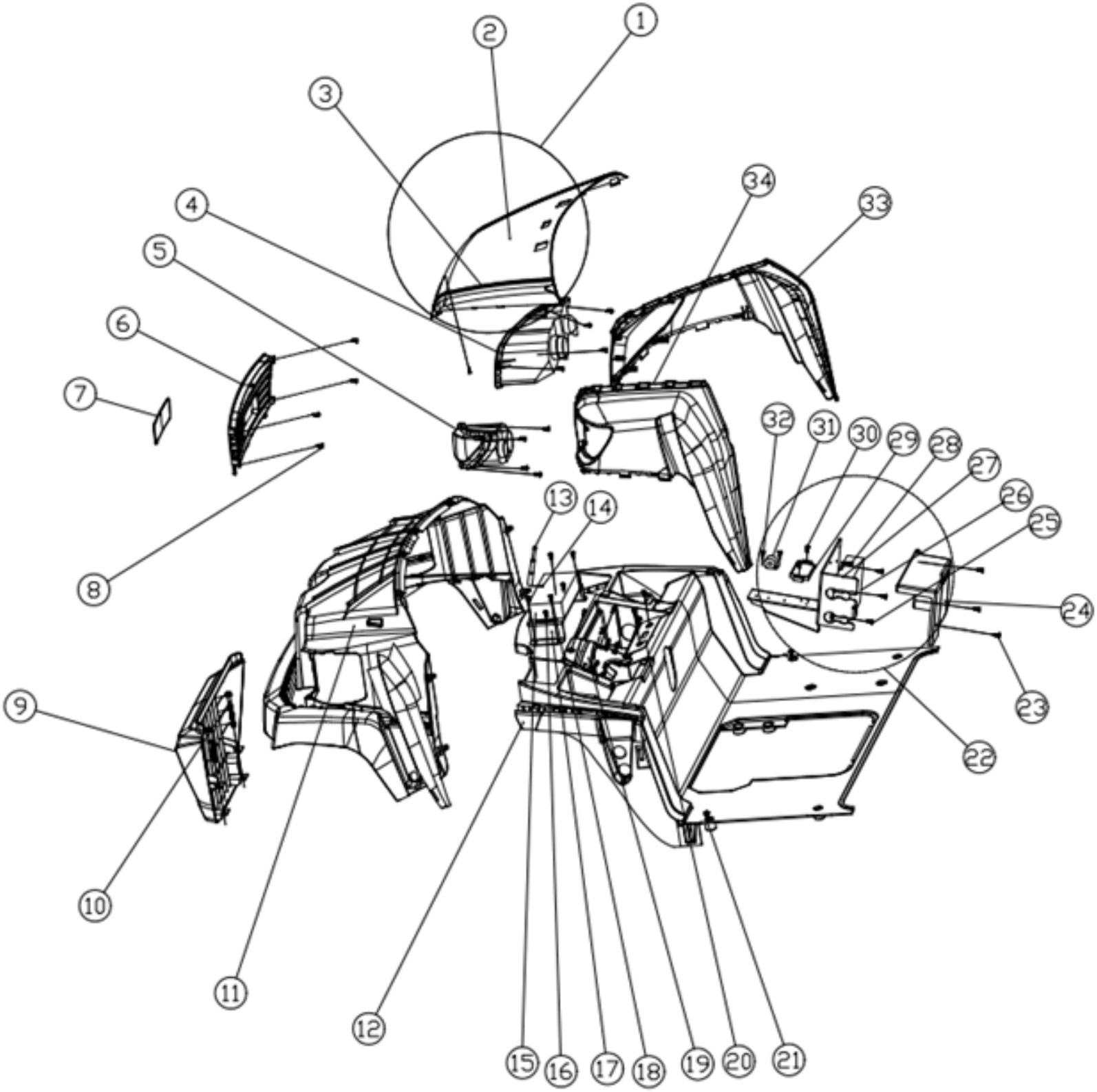

FRONT BODY PANEL PARTS CONTINUED

NO.	DESCRIPTION	PART NUMBER	PCS	MEMO
17	Non-Isolated DC/DC Converters mounting plate	3.05.40.187	1	
18	Flange Screw M8*16	4.03.02.01.003	4	
19	Steering Column Lower Cover Plate	4.05.01.33.082	1	M Type
20	Disc Brake Pedal Frame Cover	4.05.01.01.068	1	D-A
21	Inner Hexagon Self Drilling Screw 6.3*60	4.03.03.12.030	4	
22	Fuse Box Assembly	*FULL ASSEMBLY*	1	M Type
23	Flange Screw M6*20	4.03.02.01.004	3	
24	Fuse Box Lid	4.05.01.33.037	1	M Type
25	Flange Screw M5*16	4.03.03.06.024	5	
26	Fuse Box Assembly	4.04.14.03.002	1	M Type
27	Fuse Box Plate	3.05.40.003	1	M Type
28	Flange Screw M6*20	4.03.02.01.004	2	
29	12V Relay (For High Light)	4.04.14.02.020	1	M Type
30	Self-tapping Screw M5*20	4.03.02.06.019	1	
31	Reverse Buzzer	4.04.02.06.002	1	
33	Stainless Steel Pan Head Cross Machine Nails M3*10	4.03.03.01.011	2	

FRONT BODY PANEL PARTS DIAGRAM CONTINED

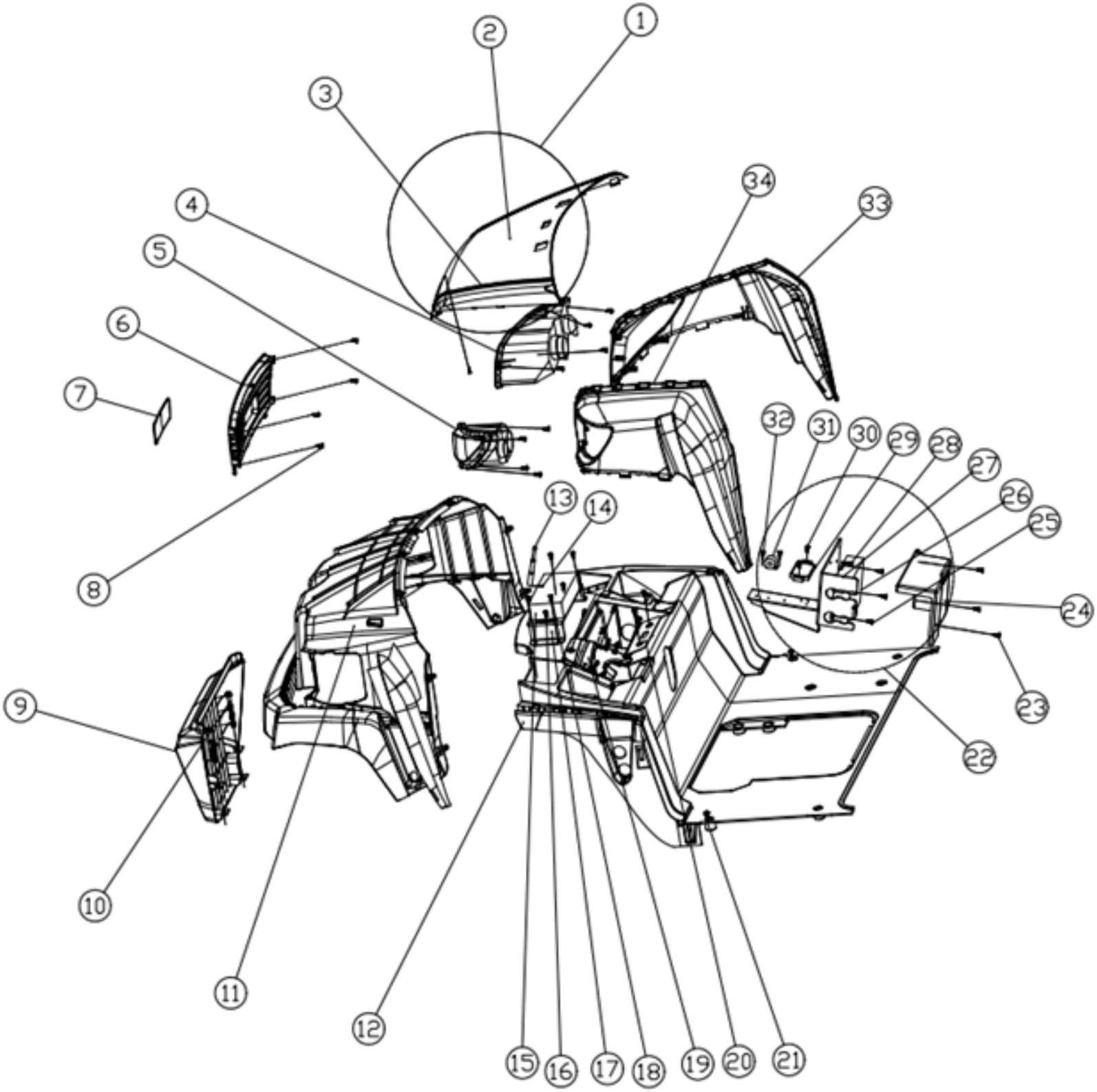

FRONT BODY PANEL PARTS CONTINUED				
NO.	DESCRIPTION	PART NUMBER	PCS	MEMO
34	Beyond Front Quarter Panel/RH *NOTE COLOR WHEN ORDERING*	4.05.01.33.004-OceanBlue 4.05.01.33.004-NavyBlue 4.05.01.33.004-'25Orange 4.05.01.33.004-HydroBlue 4.05.01.33.004-Mint 4.05.01.33.004-Red 4.05.01.33.004-White 4.05.01.33.004-Titanium 4.05.01.33.004-Black	1	M Type
35	Beyond Front Quarter Panel / LH *NOTE COLOR WHEN ORDERING*	4.05.01.33.003-OceanBlue 4.05.01.33.003-Navy Blue 4.05.01.33.003-'25Orange 4.05.01.33.003-HydroBlue 4.05.01.33.003-Mint 4.05.01.33.003-Red 4.05.01.33.003-White 4.05.01.33.003-Titanium 4.05.01.33.003-Black	1	M Type

DASH PANEL PARTS DIAGRAM

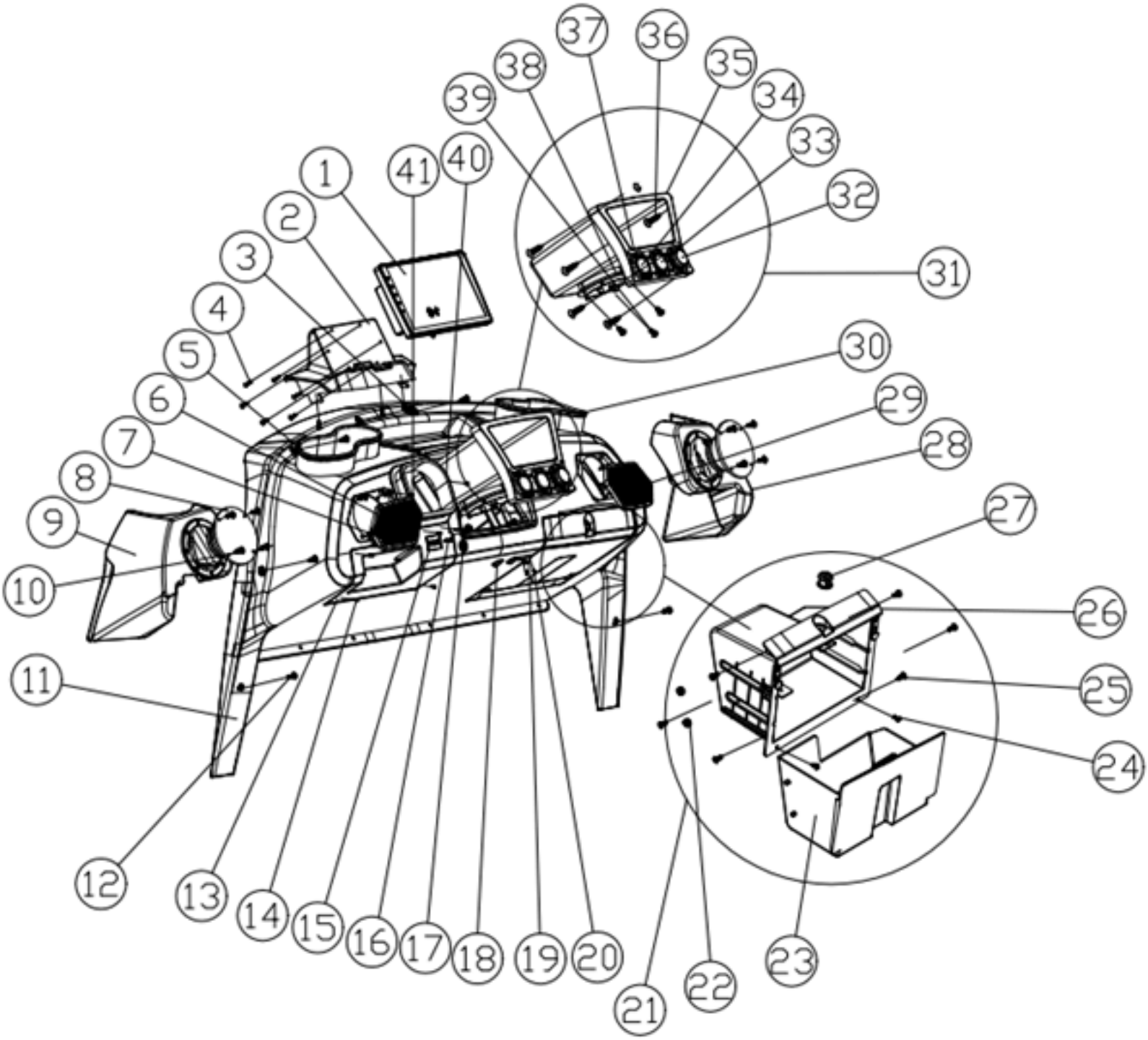

DASH PANEL PARTS

NO.	DESCRIPTION	PART NUMBER	PCS	MEMO
1	9" Display Assembly with USB	4.04.03.10.056	1	
2	9" Display Holder	4.05.01.33.124	1	
3	Hexagonal large flat head self-tapping nail/ M5*25	4.03.03.06.025	3	
4	Stainless Steel Pan Head Cross Machine Nails M3*10	4.03.03.01.011	6	
5	Cup Holder/LH/RH	4.05.01.33.012	1	
6	Speaker Cover / LH	4.05.01.33.014	1	
7	Stainless Steel Pan Head Cross Machine Nails M3*10	4.03.03.01.011	4	
8	Complete Speaker	4.04.02.06.024	2	
9	D-AM Horn Front Chamber/LH	4.05.01.33.119	1	
10	Stainless Steel Cross Plate Head Machine Screws With Pad Screws M3*16	4.03.03.07.028	4	
11	Dash Panel	4.05.01.33.008	1	
12	Inner Hexagon Large Flat Head Self-Tapping Screws M5*25	4.03.03.15.040	8	
13	Adjustable Steering Column Lower Cover on Dashboard	4.05.01.33.127	1	
14	Stainless Steel Cross Pan Head Self-Tapping Screws M2.2*12	4.03.03.15.026	5	
15	Battery Meter For Lithium Battery	4.04.01.10.028	1	
16	One-Word Round Head Screw	4.03.02.08.005	2	
17	Hazard Light Switch	4.04.02.11.002	1	
18	KCD1 Peephole Switch	4.04.02.01.059	2	
19	Standard Communication Interface	2.01.02.10.005	1	
20	Stainless Cross Large Flat Head Screw M4*16	4.03.03.15.004	2	

DASH PANEL PARTS DIAGRAM CONTINUED

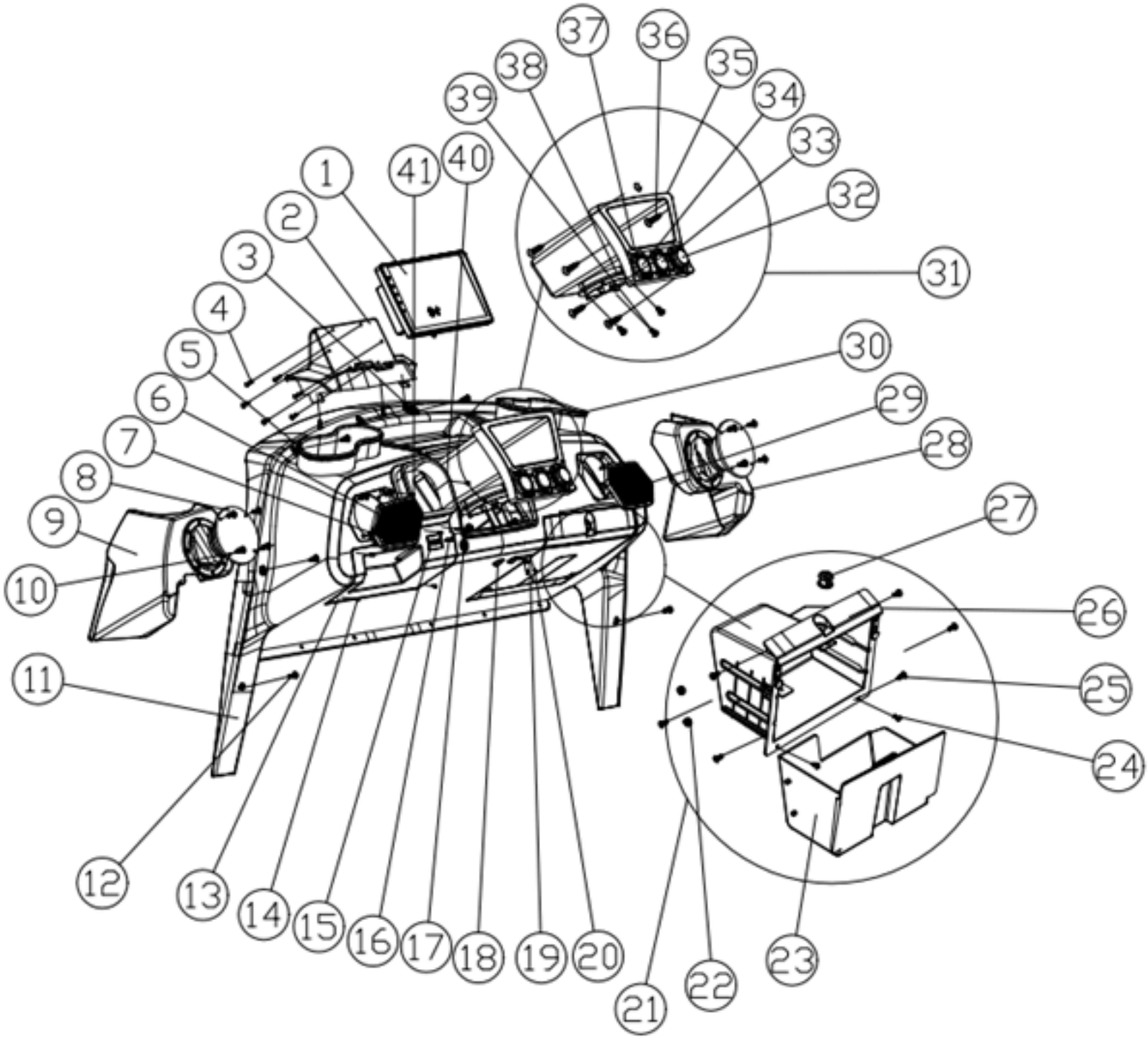

DASH PANEL PARTS CONTINUED

NO.	DESCRIPTION	PART NUMBER	PCS	MEMO
21	Storage Box Assembly	*FULL ASSEMBLY*	1	
22	Housing For Charge Indicator	*PART OF FULL ASSEMBLY*	4	M Type
23	Storage Box	4.05.01.33.018	1	D-AM
24	304 Crossed Pan Head Tapping Screws M2.2*12 (Dacromet)	4.03.03.15.026	2	
25	Stainless Steel Large Flat Head Self-Tapping Screw M4*16	4.03.03.15.004	6	
26	Glove Box Fixed Base	*PART OF FULL ASSEMBLY*	1	D-AM
27	Unique Ignition W/Keys	4.04.02.02.012	1	
28	D-AM Horn Front Chamber/RH	4.05.01.33.120	1	
29	Speaker Cover / RH	4.05.01.33.015	1	
30	Cup Holder/LH/RH	4.05.01.33.012	1	
31	Wireless Charger Assembly For Cubby	*FULL ASSEMBLY*	1	
32	USB Port	*PART OF FULL ASSEMBLY*	1	9-inch Multimedia Instrument Package
33	Unique Ignition W/Keys	4.04.02.02.012	1	
34	Cigar Lighter Base	4.04.14.02.005	1	M Type
35	Wireless Charger Holder	4.05.01.33.125	1	
36	Hexagonal Large Flat Head Self-Tapping Nail/ M5*16/Black	4.03.03.06.024	4	
37	Wireless Charger Holder Non-Slip Pad	4.05.01.33.126	1	
38	Wireless Charger	4.04.07.142	1	
39	Stainless Countersunk Head Cross Tapping Nail /M3*10	4.03.03.01.0120	3	
40	Beyond Adjustable Steering Column Cutting Presses	*PART OF FULL ASSEMBLY*	1	
41	Stainless Cross Pan Head Self Tapping Nail 2.2*20	4.03.03.06.007	4	

CHASSIS PARTS DIAGRAM

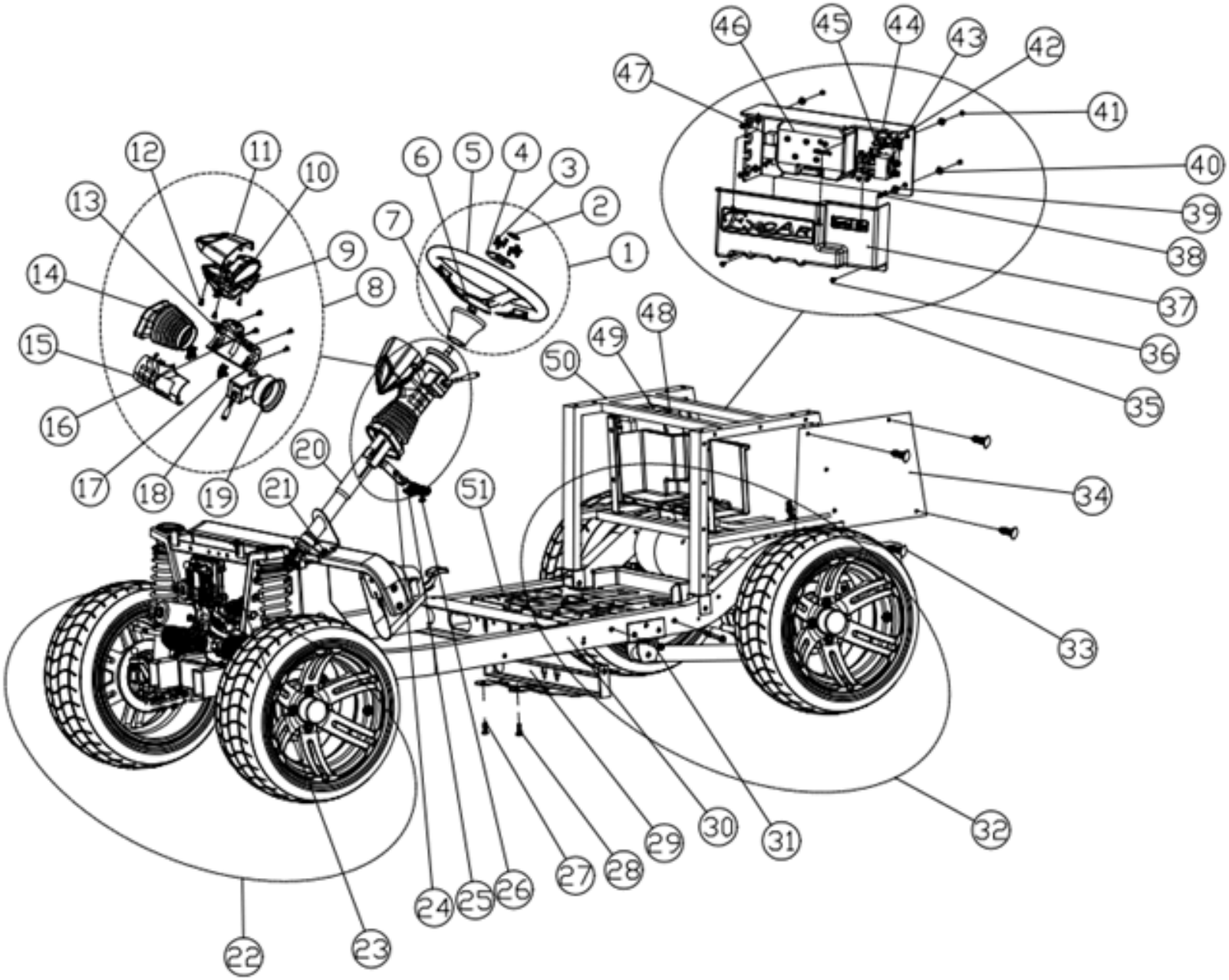

CHASSIS PARTS

NO.	DESCRIPTION	PART NUMBER	PCS	MEMO
1	Steering Wheel Assembly	*FULL ASSEMBLY*	1	
2	Steering Wheel Logo	4.05.03.35.009	1	
3	Screw M5*16	4.03.03.01.007	6	
4	Steering Wheel Upper Decorative Cover 5126	*PART OF FULL ASSEMBLY*	1	
5	Steering Wheel Assembly	4.02.01.03.042	1	
6	Lock Nut M12*1.25	4.03.04.01.005	1	
7	Steering Wheel Base	4.02.01.01.075	1	A, M Type
8	Column Cover with Display Assembly	*FULL ASSEMBLY*	1	M Type
9	Beyond Display Housings/Down	*FULL ASSEMBLY*	1	
10	Beyond Display (DC OR CAN) Circuit Board (Finished Board)	*FULL ASSEMBLY*	1	
11	Beyond Display Housings/Upper	*FULL ASSEMBLY*	1	
12	Large Flat Cross Head Self Tapping Screw M4*16	4.03.03.07.012	4	
13	Adjustable Steering Column Cover RH	4.05.01.33.073	1	D-AM
14	Adjustable Steering Column Leather Cover	4.05.01.33.137	1	M Type
15	Adjustable Steering Column Cover LH	4.05.01.33.072	1	
16	Hexagonal Large Flat Head Self-Tapping Nail/ M5*16	4.03.03.06.024	4	
17	Steering Column Rubber Pad	*FULL ASSEMBLY*	2	CK Type
18	Combination Switch	4.04.14.01.007	1	
19	Steering Column Upper Gasket	4.05.01.33.048	1	
20	Adjustable Steering Column Assembly	4.02.01.01.098	1	
21	Screw Flange M8*20	4.03.02.01.014	4	
22	Front Axle	*FULL ASSEMBLY*	1	
23	Universal Joint Assembly	4.02.01.01.046	1	

CHASSIS PARTS DIAGRAM CONTINUED

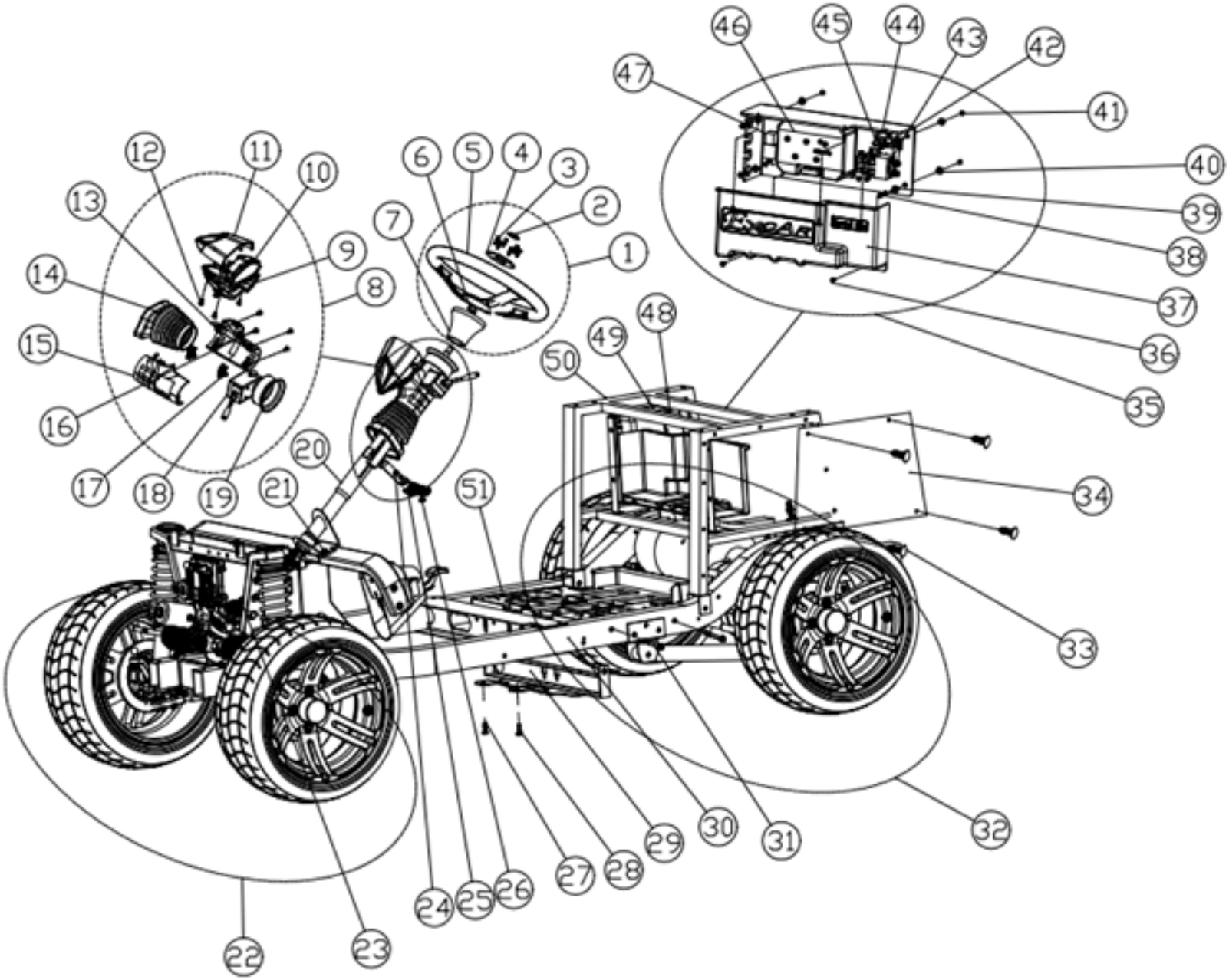

CHASSIS PARTS CONTINUED

NO.	DESCRIPTION	PART NUMBER	PCS	MEMO
24	Stainless Steel Screw M6*16	4.03.03.04.018	1	
25	Adjustable Steering Column Handle	4.05.01.33.128	1	M Type
26	Stainless Steel Nylon Self-Locking Nut M6	4.03.04.04.022	1	
27	Flange Screw M8*20	4.03.02.01.014	4	
28	Flange Screw M8*35	4.03.02.01.017	1	
29	Cable Bracket Bar Assembly	*FULL ASSEMBLY*	1	
30	Chassis	***NOT A SPARE PART***	1	
31	Flange Screws M10*85	4.03.02.01.077	4	
32	Rear Axle Tube	*FULL ASSEMBLY*	1	
33	Plastic Nail C104	4.05.04.05.003	18	
34	Mud Board	3.06.01.09.002	2	A Type
35	Electric Control Box Assembly	*FULL ASSEMBLY*	1	
36	Cross Flange Head Self-Tapping Screw/M5*20	4.03.02.06.019	5	
37	Controller Cover	4.05.01.33.033	1	M Type
38	Flange Screws M6*25	4.03.02.01.005	4	
39	Electrical Control Aluminum Plate Insulation	4.05.04.06.007	4	
40	Electrical Control Aluminum Plate Insulation	4.05.04.06.007	4	
41	Lock Nut M6*1.25	4.03.04.01.001	4	
42	Controller Plate	3.05.40.016	1	M Type
43	Main Contactor	4.04.01.12.007	1	
44	Ceramics Fuse Seat	4.04.06.10.025	1	
45	Fuse 400A	4.04.06.10.012	1	
46	Controller	4.04.01.05.075	1	JEVD1-72M450L

CHASSIS PARTS DIAGRAM CONTINUED

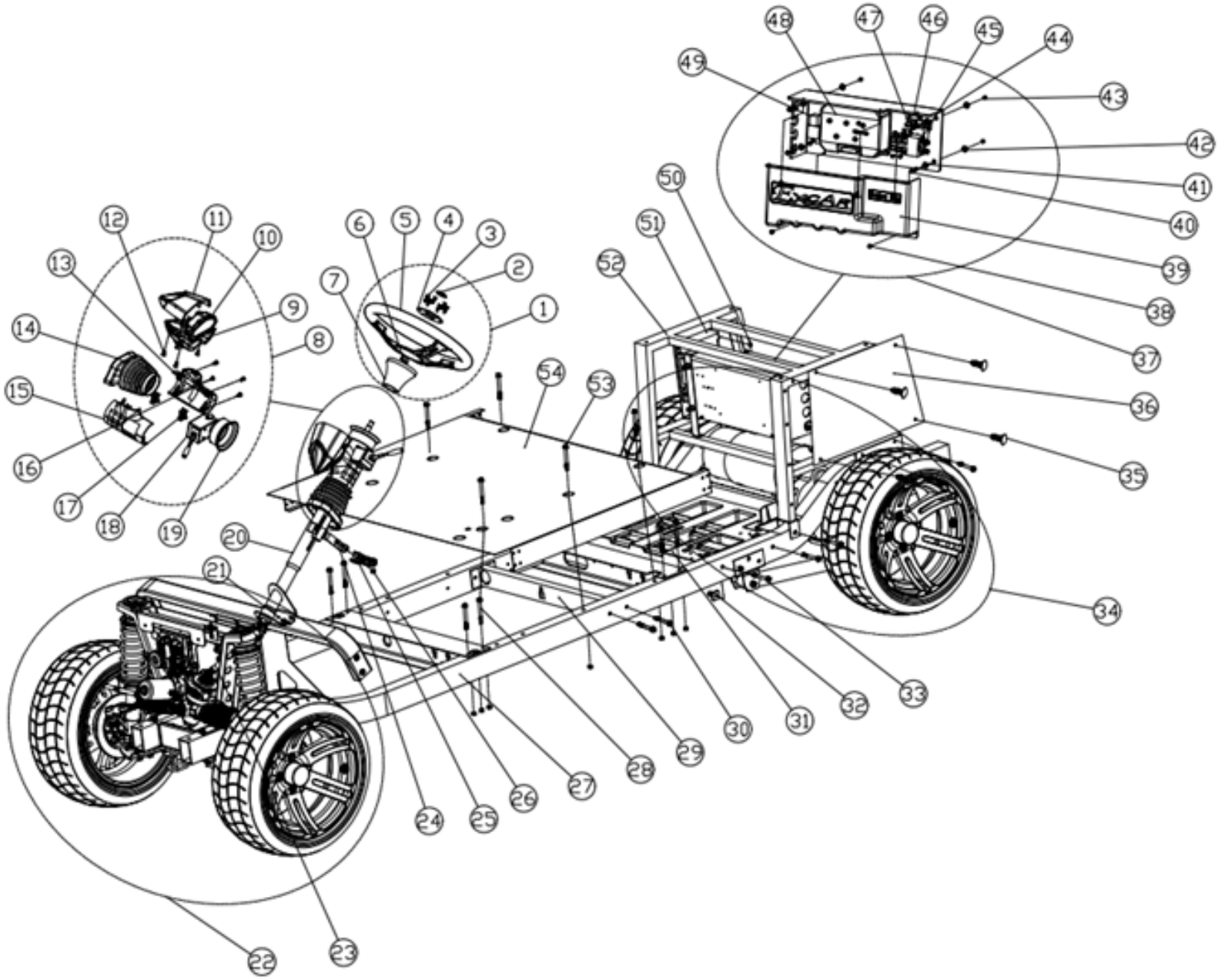

CHASSIS PARTS CONTINUED				
NO.	DESCRIPTION	PART NUMBER	PCS	MEMO
47	Relay 12V 30A	4.04.02.05.016	1	CMA36-S-DC12V-C-R
48	Lock Nut M6*1.25	4.03.04.01.001	4	
49	DC/DC Converter	4.04.11.02.009	1	
50	Rear Body Support Assembly	3.02.01.33.014	1	M Type
51	Front Underbody	4.05.01.01.043	1	A4

FRONT AXLE PARTS DIAGRAM

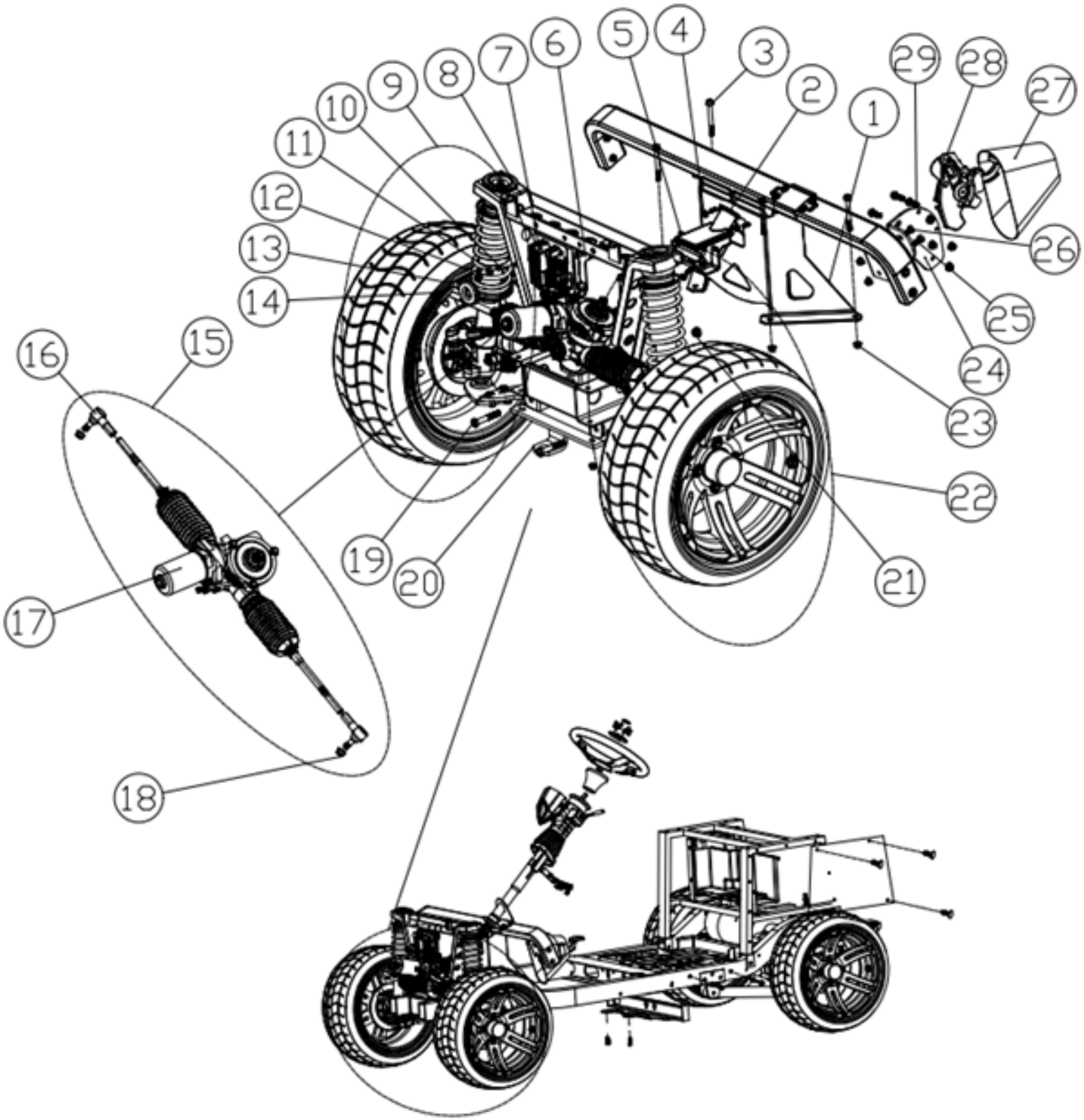

FRONT AXLE PARTS

NO.	DESCRIPTION	PART NUMBER	PCS	MEMO
1	Front Underbody Support	3.02.01.01.124	1	
2	Brake Reservoir	4.05.04.07.004	1	
3	Flange Screws M8*90	4.03.02.01.027	4	
4	Lock Nut M6*1.25	4.03.04.01.001	2	
5	Brake Reservoir Bracket	3.02.01.17.016	1	
6	Power Steering System Controller Mounting Plate	3.02.01.01.221	1	
7	Steering Controller	*FULL ASSEMBLY*	1	
8	Front Axle (Subframe Assembly)	3.02.01.33.029	1	M2
9	Front Suspension Right Part	*FULL ASSEMBLY*		
10	Lock Nut M6*1.25	4.03.04.01.001	1	
11	Insulating Gasket C	3.04.04.018	1	
12	Insulating Gasket B	3.04.04.017	1	
13	Horn	4.04.02.06.021	1	
14	Flange Screws M6*20	4.03.02.01.004	1	
15	Electronic Power Steering Assembly	*FULL ASSEMBLY*	1	
16	Tie Rod End	4.02.01.01.044	2	A Type
17	Electronic Power Steering System Assembly	4.02.01.01.094	1	
18	Lock Nut M12*1.25	4.03.04.01.005	2	
19	Screw Flange M12*75	4.03.02.01.043	4	
20	Trailer Mechanism	3.02.01.01.008	1	
21	Lock Nut M12*1.25	4.03.04.01.005	4	
22	Front Suspension Left Part	*FULL ASSEMBLY*		
23	Lock Nut M8*1.25	4.03.04.01.003	4	
24	Foot Brake Pedal Mounting Plate	3.02.01.33.121	1	M Type
25	Countersunk Cross Machine Nail 8*25	4.03.03.02.023	1	
26	Flange Screw M8*20	4.03.02.01.014	3	
27	Foot Brake Cover/With Screw	4.05.04.09.032	1	M Type
28	4PR Parking Brake	4.02.13.02.003	1	M Type
29	Flange Screw M8*16	4.03.02.01.003	3	

FRONT AXLE LH PARTS DIAGRAM

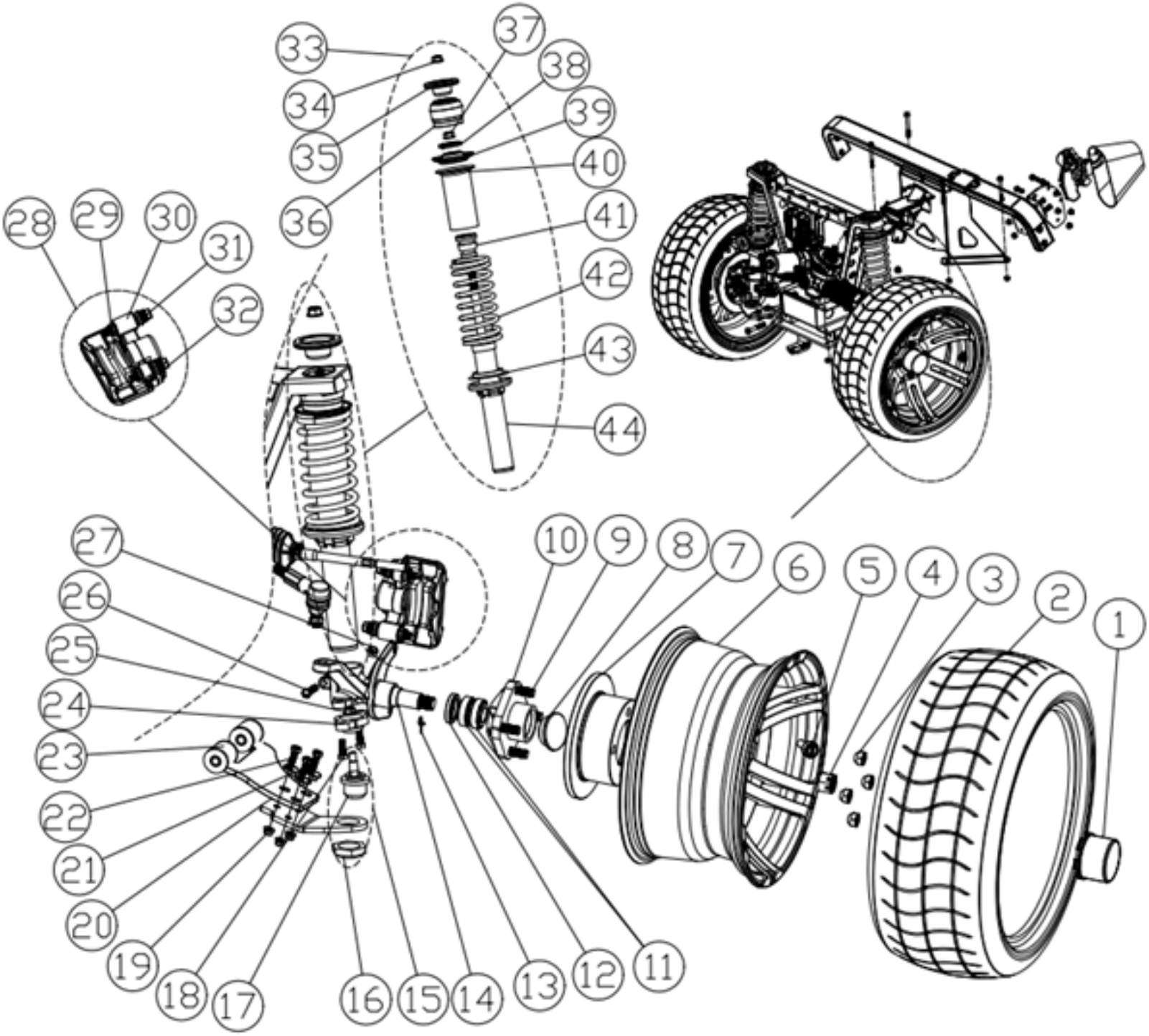

FRONT AXLE LH PARTS

NO.	DESCRIPTION	PART NUMBER	PCS	MEMO
1	Hub Cap	4.05.04.03.006	1	A Type
2	Wanda Tire	4.02.07.01.099	1	215/35 R14
3	Alum Rim Nut/M1/2-20	4.03.04.03.003	4	M1/2-20
4	Split Nut M20*1.5	4.03.04.03.007	1	M20*1.5
5	Rim Valve	4.02.07.03.001	1	
6	Alum Rim	4.02.13.01.002	1	A0761475 14*7/ET-10
7	Front/Rear Brake Disc	4.02.02.10.063	1	A Type
8	Bearing Base Cover	*FULL ASSEMBLY*	1	
9	Hub Screw	4.03.02.02.004	4	1/2-20*41
10	Hub Assembly	4.02.01.01.036	1	
11	Bearing 32005	4.03.01.02.014	2	
12	Oil Seal/Hub 30*47*8mm	4.05.04.01.008	1	
13	Pin. Opening/M2.5*30	4.03.06.05.011	1	
14	Disc-Brake Spindle/LH	4.02.02.10.006	1	
15	Tie,Rod,Rocker Arm	*FULL ASSEMBLY*	1	
16	Rocker Arm Ball Head Nut	4.03.04.02.013	1	
17	Ball Joint	4.02.04.01.046	1	
18	Flange Screws M10*25	4.03.02.01.032	2	
19	Lock Nut M8*1.25	4.03.04.01.003	3	
20	Not Lifted Moving Rocker Arm Lower Moving Plate LH	3.02.01.01.233	1	
21A	Camber Washer 0	4.03.05.03.027	3	
21B	Camber Washer +-	4.03.05.03.028	3	

FRONT AXLE LH PARTS DIAGRAM CONTINUED

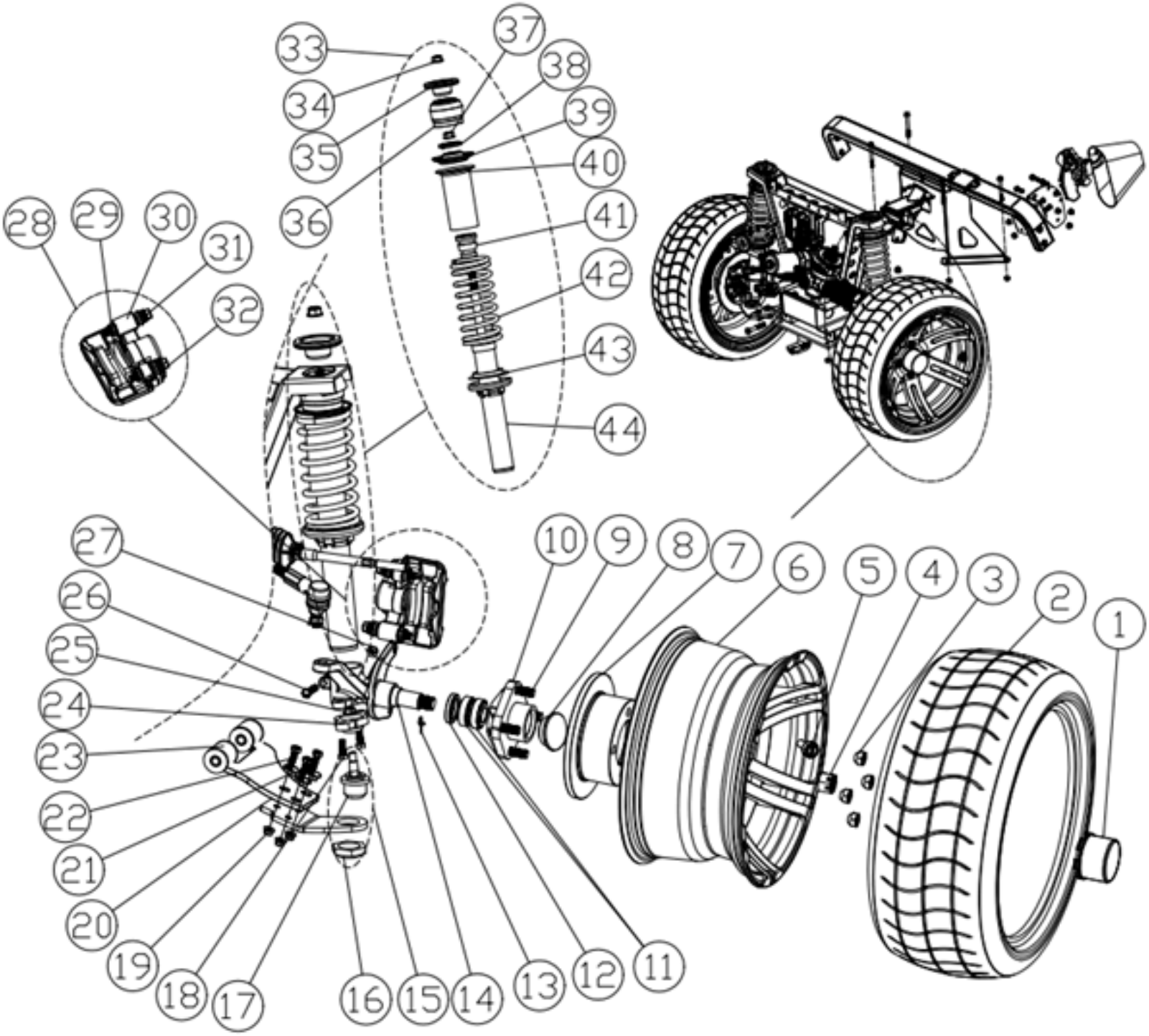

FRONT AXLE LH PARTS CONTINUED

NO.	DESCRIPTION	PART NUMBER	PCS	MEMO
22	Flange Screw M8*30	4.03.02.01.016	3	
23	Not Lifted Moving Rocker Arm Upper Board	3.02.01.01.232	1	
24	Spindle Shaft Base	4.02.01.01.018	1	A Type
25	Lock Nut M10*1.25	4.03.04.01.004	1	
26	Screw Flange M8*45	4.03.02.01.019	1	
27	Lock Nut M8*1.25	4.03.04.01.003	1	
28	Front Caliper	*FULL ASSEMBLY*	1	
29	Brake Shoe/Disc Brake	4.02.05.03.003	2	
30	Front Caliper/LH	4.02.05.01.038	1	ZY01-3501010/020
31	Flange Screws M10*70	4.03.02.01.038	1	
32	Flange Screws M10*55	4.03.02.01.036	1	
33	Front Shock Absorber Assembly	2.01.01.02.007	1	TF-2
34	Lock Nut M12*1.25	4.03.04.01.005	1	
35	Shock Absorber Upper Plate	4.02.04.04.002	1	
36	Rubber Buffer	4.02.04.01.036	1	
37	Lock Nut M12*1.25	4.03.04.01.005	1	
38	Front Engine Bearing	4.03.01.02.026	1	96FB 3K099--
39	Front Shock Absorber Rubber	4.02.04.01.041	1	
40	Front Shock Absorber Rubber Dust Cover	4.02.04.01.077	1	Φ85*130
41	Front Shock Absorber Rubber Buffer	4.02.04.01.076	1	
42	A2 Spring	4.02.04.01.020	1	A2
43	Front Spring Lower Limit Gasket	*FULL ASSEMBLY*	1	
44	TF-2 Damper	4.02.04.04.001	1	TF-2

FRONT AXLE RH PARTS DIAGRAM

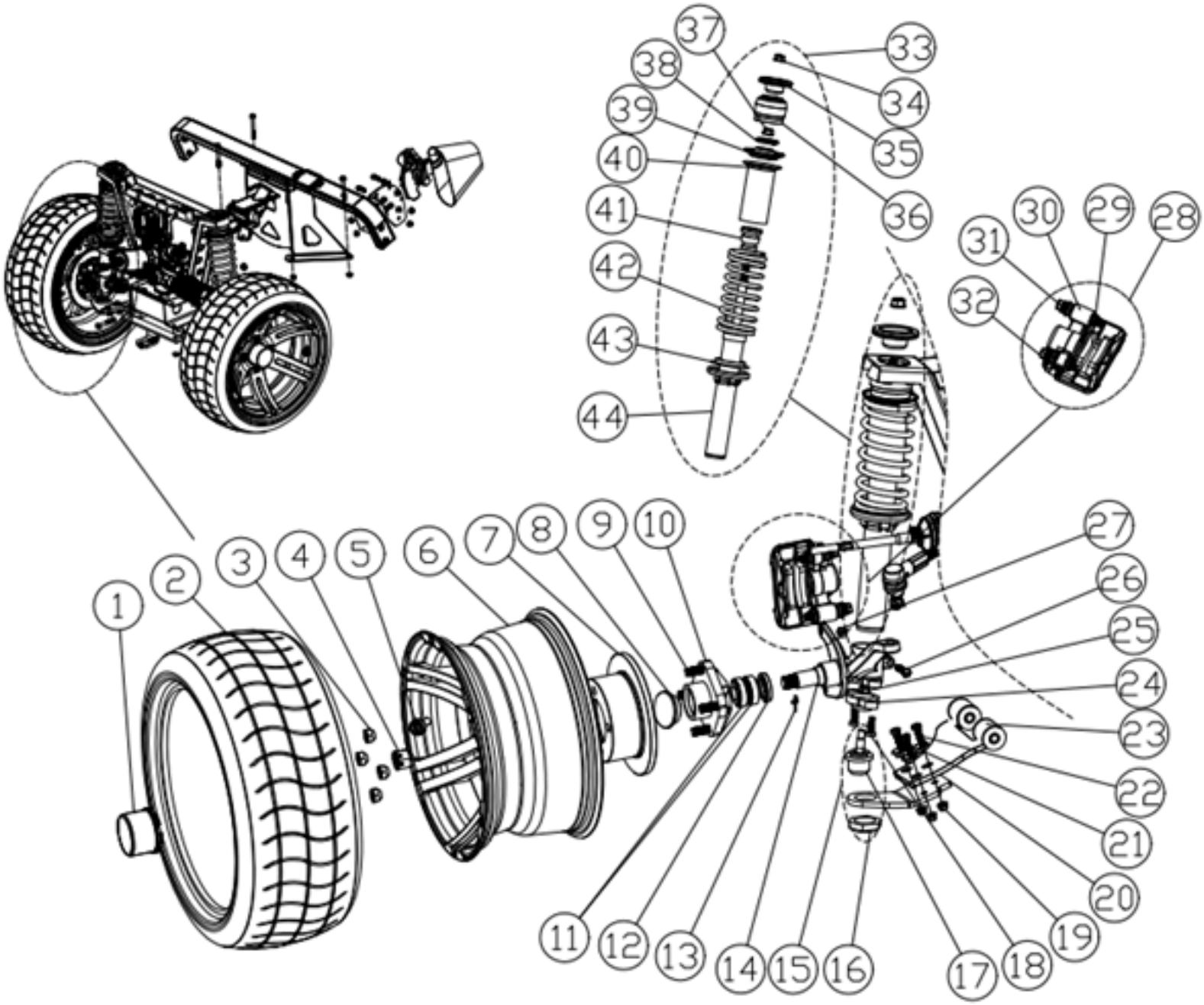

FRONT AXLE RH PARTS

NO.	DESCRIPTION	PART NUMBER	PCS	MEMO
1	Hub Cap	4.05.04.03.006	1	A Type
2	Wanda Tire	4.02.07.01.099	1	215/35 R14
3	Alum Rim Nut/M1/2-20	4.03.04.03.003	4	M1/2-20
4	Split Nut M20*1.5	4.03.04.03.007	1	M20*1.5
5	Rim Valve	4.02.07.03.001	1	
6	Alum Rim	4.02.13.01.002	1	A0761475 14*7/ET-10
7	Front/Rear Brake Disc	4.02.02.10.063	1	A Type
8	Bearing Base Cover	*FULL ASSEMBLY*	1	
9	Hub Screw	4.03.02.02.004	4	1/2-20*41
10	Hub Assembly	4.02.01.01.036	1	
11	Bearing 32005	4.03.01.02.014	2	
12	Oil Seal/Hub 30*47*8mm	4.05.04.01.008	1	
13	Pin. Opening/M2.5*30	4.03.06.05.011	1	
14	Disc-Brake Spindle/RH	4.02.02.10.007	1	
15	Tie,Rod,Rocker Arm	*FULL ASSEMBLY*	1	
16	Rocker Arm Ball Head Nut	4.03.04.02.013	1	
17	Ball Joint	4.02.04.01.046	1	
18	Flange Screws M10*25	4.03.02.01.032	2	
19	Lock Nut M8*1.25	4.03.04.01.003	1	
20	Not Lifted Moving Rocker Arm Lower Moving Plate RH	3.02.01.01.234	1	
21A	Camber Washer 0	4.03.05.03.027	3	
21B	Camber Washer +-	4.03.05.03.028	3	

FRONT AXLE RH
PARTS DIAGRAM CONTINUED

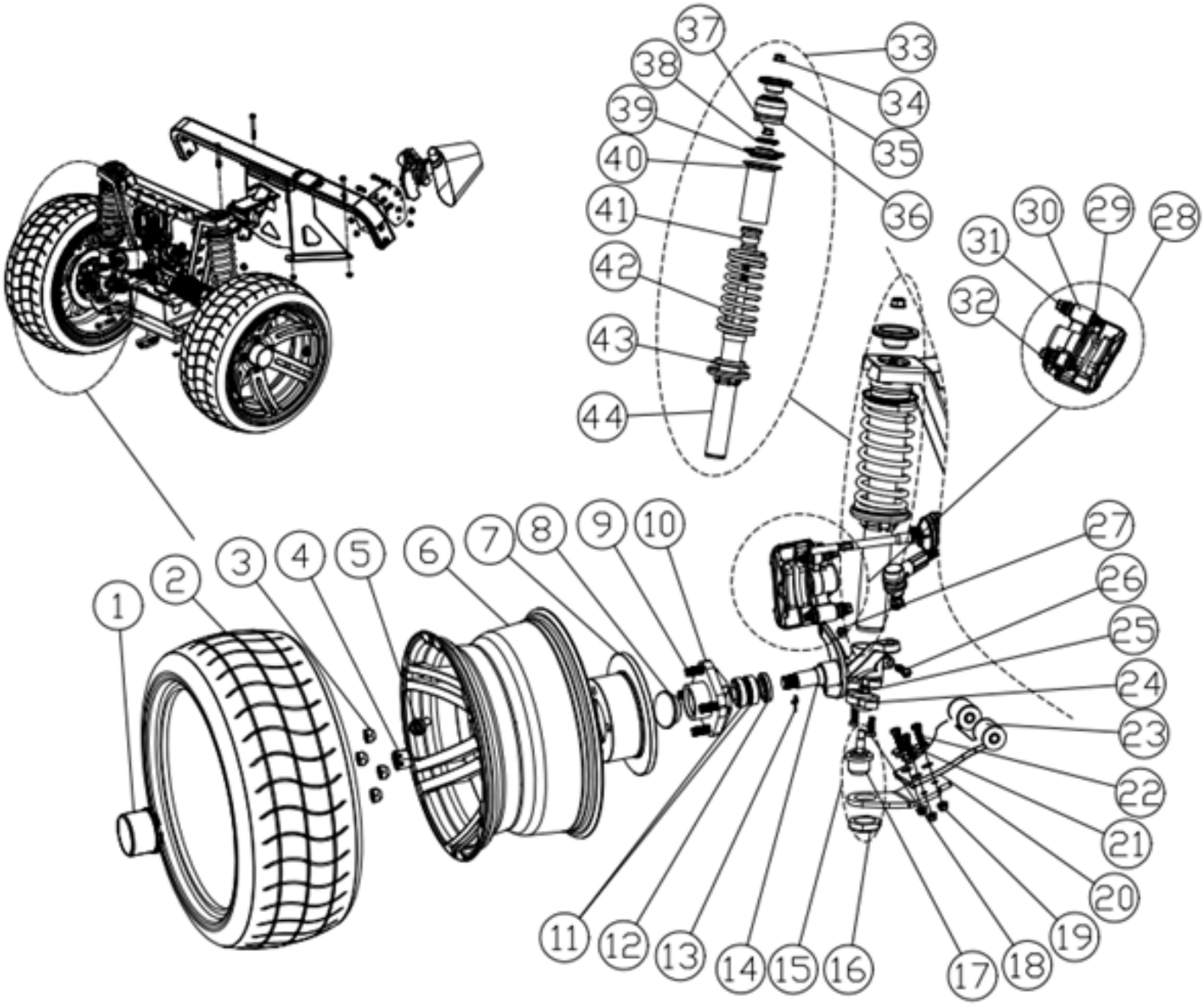

FRONT AXLE RH PARTS CONTINUED

NO.	DESCRIPTION	PART NUMBER	PCS	MEMO
22	Flange Screw M8*30	4.03.02.01.016	3	
23	Not Lifted Moving Rocker Arm Upper Board	3.02.01.01.232	1	
24	Spindle Shaft Base	4.02.01.01.018	1	A Type
25	Lock Nut M10*1.25	4.03.04.01.004	1	
26	Screw Flange M8*45	4.03.02.01.019	1	
27	Lock Nut M8*1.25	4.03.04.01.003	1	
28	Front Caliper	*FULL ASSEMBLY*	1	
29	Brake Shoe/Disc Brake	4.02.05.03.003	2	
30	Front Caliper/RH	4.02.05.01.039	1	ZY01-3501010/020
31	Flange Screws M10*70	4.03.02.01.038	1	
32	Flange Screws M10*55	4.03.02.01.036	1	
33	Front Shock Absorber Assembly	2.01.01.02.007	1	TF-2
34	Lock Nut M12*1.25	4.03.04.01.005	1	
35	Shock Absorber Upper Plate	4.02.04.04.002	1	
36	Rubber Buffer	4.02.04.01.036	1	
37	Lock Nut M12*1.25	4.03.04.01.005	1	
38	Front Engine Bearing	4.03.01.02.026	1	96FB 3K099--
39	Front Shock Absorber Rubber	4.02.04.01.041	1	
40	Front Shock Absorber Rubber Dust Cover	4.02.04.01.077	1	Φ85*130
41	Front Shock Absorber Rubber Buffer	4.02.04.01.076	1	
42	A2 Spring	4.02.04.01.020	1	A2
43	Front Spring Lower Limit Gasket	*FULL ASSEMBLY*	1	
44	Damper	4.02.04.04.001	1	TF-2

REAR AXLE TUBE PARTS DIAGRAM

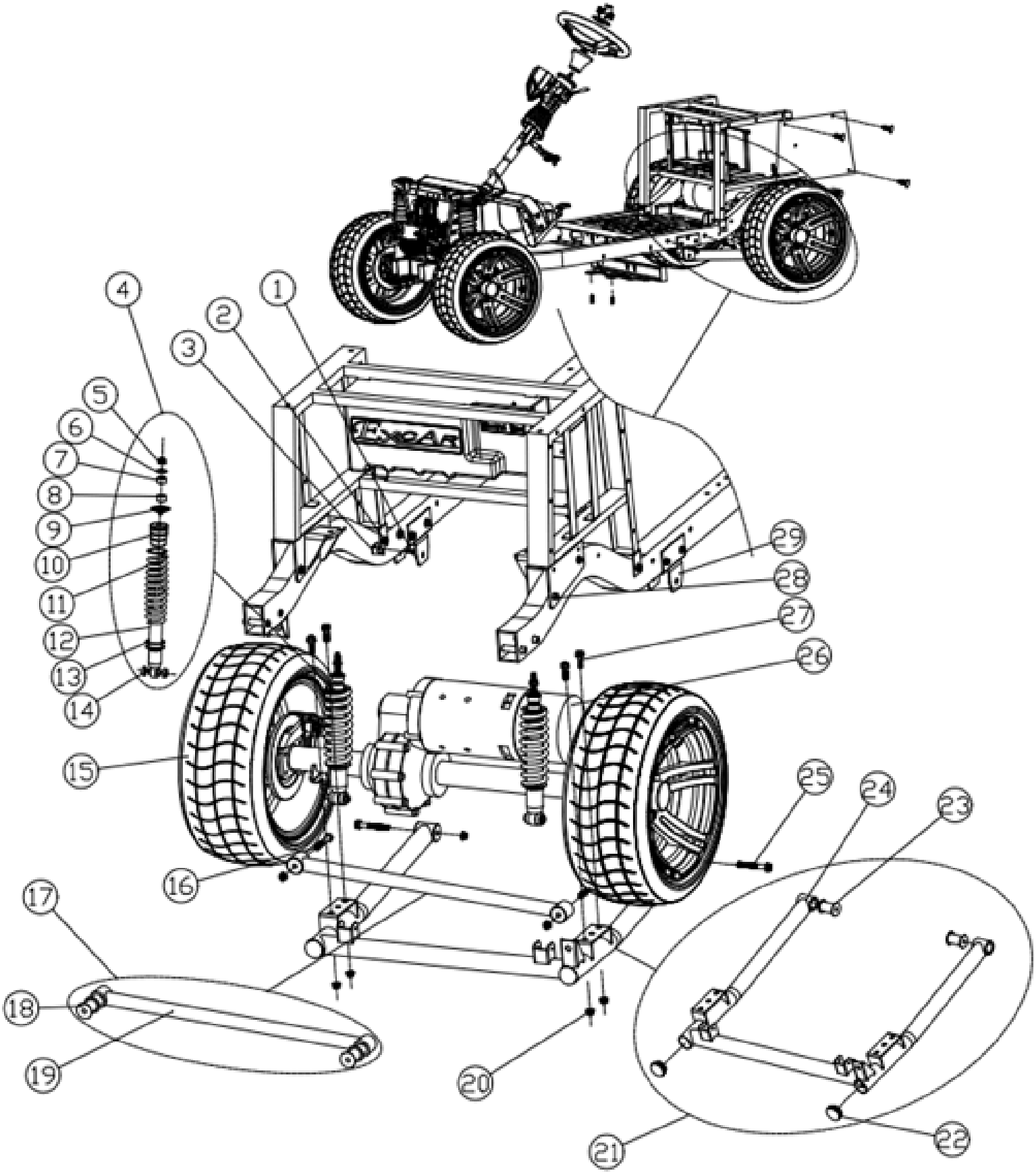

REAR AXLE TUBE PARTS

NO.	DESCRIPTION	PART NUMBER	PCS	MEMO
1	Self Tapping Hexagonal Screw/12*1 1/4	4.03.02.06.021	2	
2	Lock Nut M10*1.25	4.03.04.01.004	14	
3	Oil Pipe Bracket	3.05.40.158	2	M Type
4	Rear Shock Absorber Assembly R-3+A4	2.01.01.02.018	2	
5	Lock Nut M10*1.25	4.03.04.01.004	2	
6	Shock Absorber Upper Nut Gasket	4.02.04.01.082	2	
7	Shock Absorber Upper Rubber Washer	4.02.04.01.083	2	
8	Shock Absorber Upper Nylon Washer	4.02.04.01.084	2	
9	Shock Absorber Upper Washer	4.02.04.01.085	2	
10	Front Shock Absorber Rubber Buffer	4.02.04.01.076	2	
11	Rear Spring	4.02.04.01.016	2	
12	Rear Shock Absorber	4.02.10.034	2	
13	Rear Spring Lower Limit Gasket	*FULL ASSEMBLY*	2	
14	Rear Damper Gasket φ30*3.5	4.02.04.01.028	4	Nylon Cover
15	Leaf Spring Assembly	*FULL ASSEMBLY*		
16	Flange Screws M12*75	4.03.02.01.043	2	
17	Stabilizer Bar Assembly	*FULL ASSEMBLY*	1	
18	Rocker Arm Bushing	4.02.04.01.005	2	TS60
19	Stabilizer Bar	3.02.01.01.036	1	
20	Lock Nut M12*1.25	4.03.04.01.005	6	

REAR AXLE TUBE PARTS DIAGRAM CONTINUED

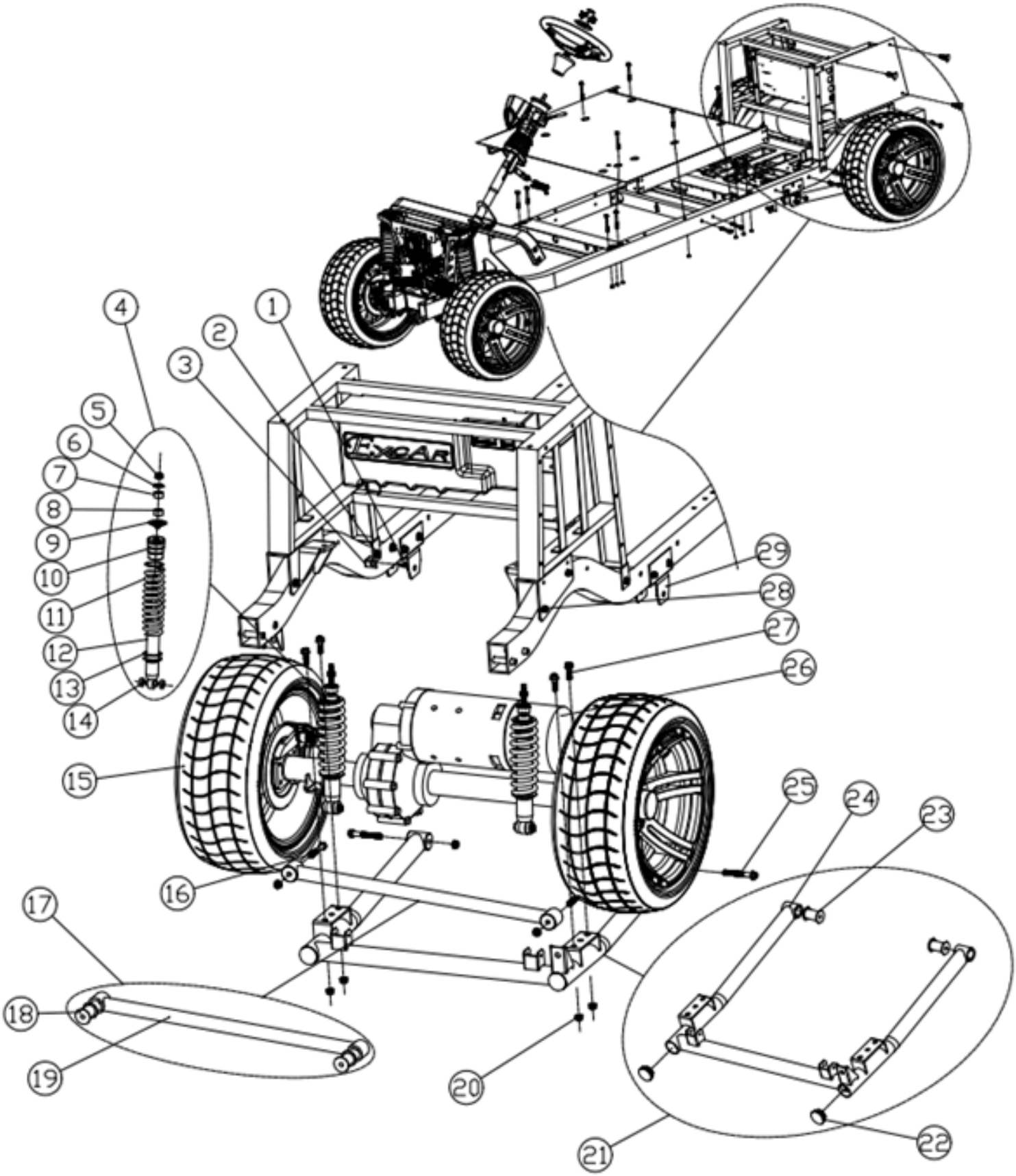

REAR AXLE TUBE PARTS CONTINUED

NO.	DESCRIPTION	PART NUMBER	PCS	MEMO
21	Rear Axle Tube Kit Assembly	2.01.01.07.001	1	
22	φ45 Pipe Cover	4.05.04.03.005	2	A Type
23	Rear Suspension Bushing	4.02.04.02.004	2	Rear Axle Elbow Rubber Sleeve
24	Rear Axle Tube Kit	3.02.01.01.099	1	
25	Flange Screws M12*85	4.03.02.01.058	2	
26	5KW Motor	4.04.01.05.076	1	72V5KW
27	Flange Screws M12*30	4.03.02.01.041	4	
28	Flange Screws M10*70	4.03.02.01.038	10	
29	Bracket Rear Axle Tube	3.02.01.01.035	2	A Type

LEAF SPRING ASSEMBLY PARTS DIAGRAM

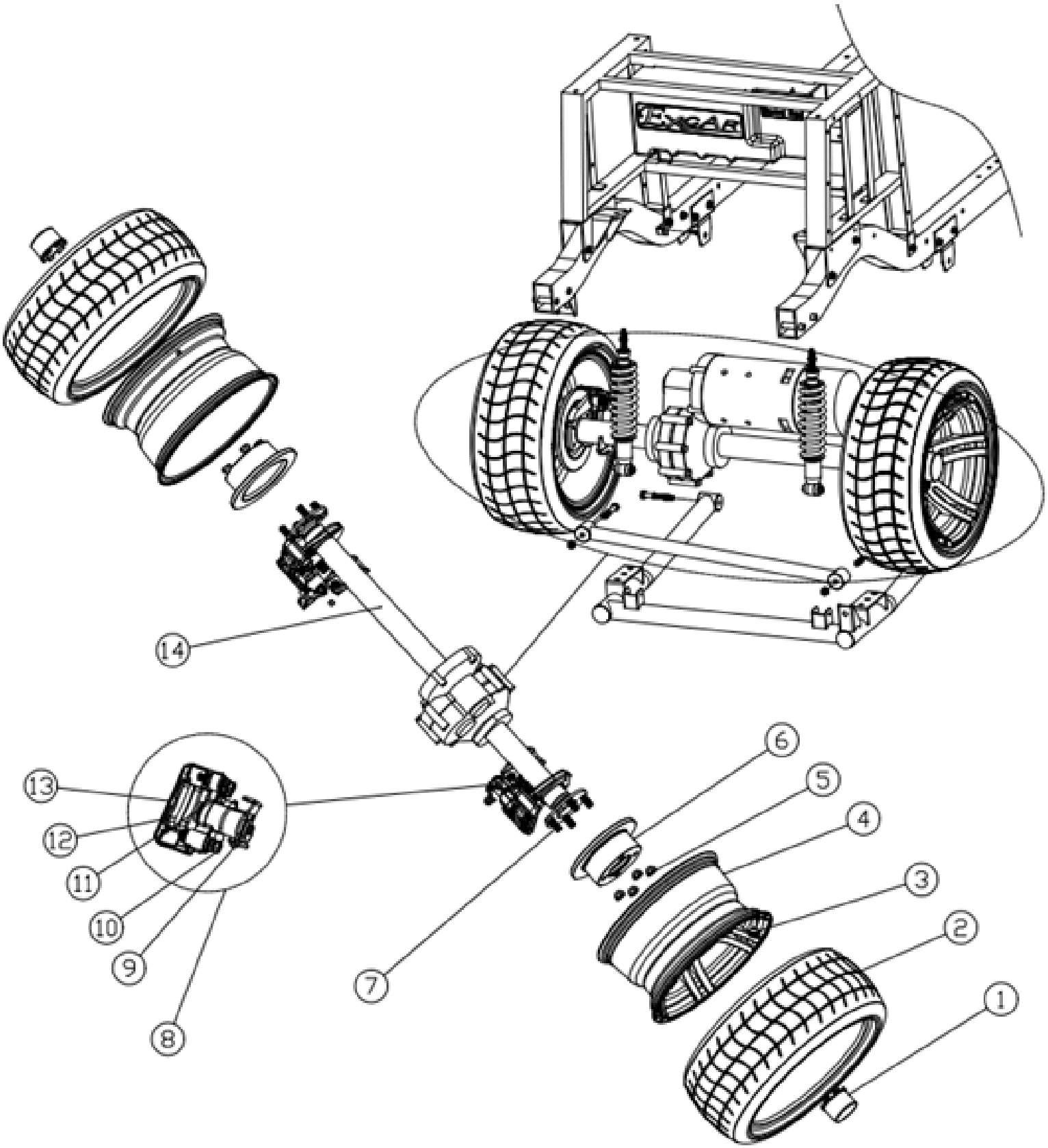

LEAF SPRING ASSEMBLY PARTS				
NO.	DESCRIPTION	PART NUMBER	PCS	MEMO
1	Hub Cap	4.05.04.03.006	2	
2	Wanda Tire	4.02.07.01.099	2	215/35 R14
3	Rim Valve	4.02.07.03.001	2	
4	Alum Rim	4.02.13.01.002	2	A0761475 14*7/ET-10
5	Alum Rim Nut/M1/2-20	4.03.04.03.003	8	M1/2-20
6	Front/Rear Brake Disc	4.02.02.10.063	2	A Type
7	Hub Screw	4.03.02.02.004	8	1/2-20*41
8A	Rear Caliper/LH	4.02.05.01.037	1	ZY01-3501010/020
8B	Rear Caliper/RH	4.02.05.01.036	1	ZY01-3501010/020
9	Caliper Cable Holder	*INCLUDED WITH CALIPER*	2	
10	Flange Screws M10*70	4.03.02.01.038	2	
11	Flange Screws M10*55	4.03.02.01.036	2	
12	Brake Shoe/Disc Brake	4.02.05.03.003	4	
13	Rear Caliper	*FULL ASSEMBLY*	2	
14	Transaxle	4.02.06.02.042	1	LY130C-DS 12:1

FRONT UNDERBODY PARTS DIAGRAM

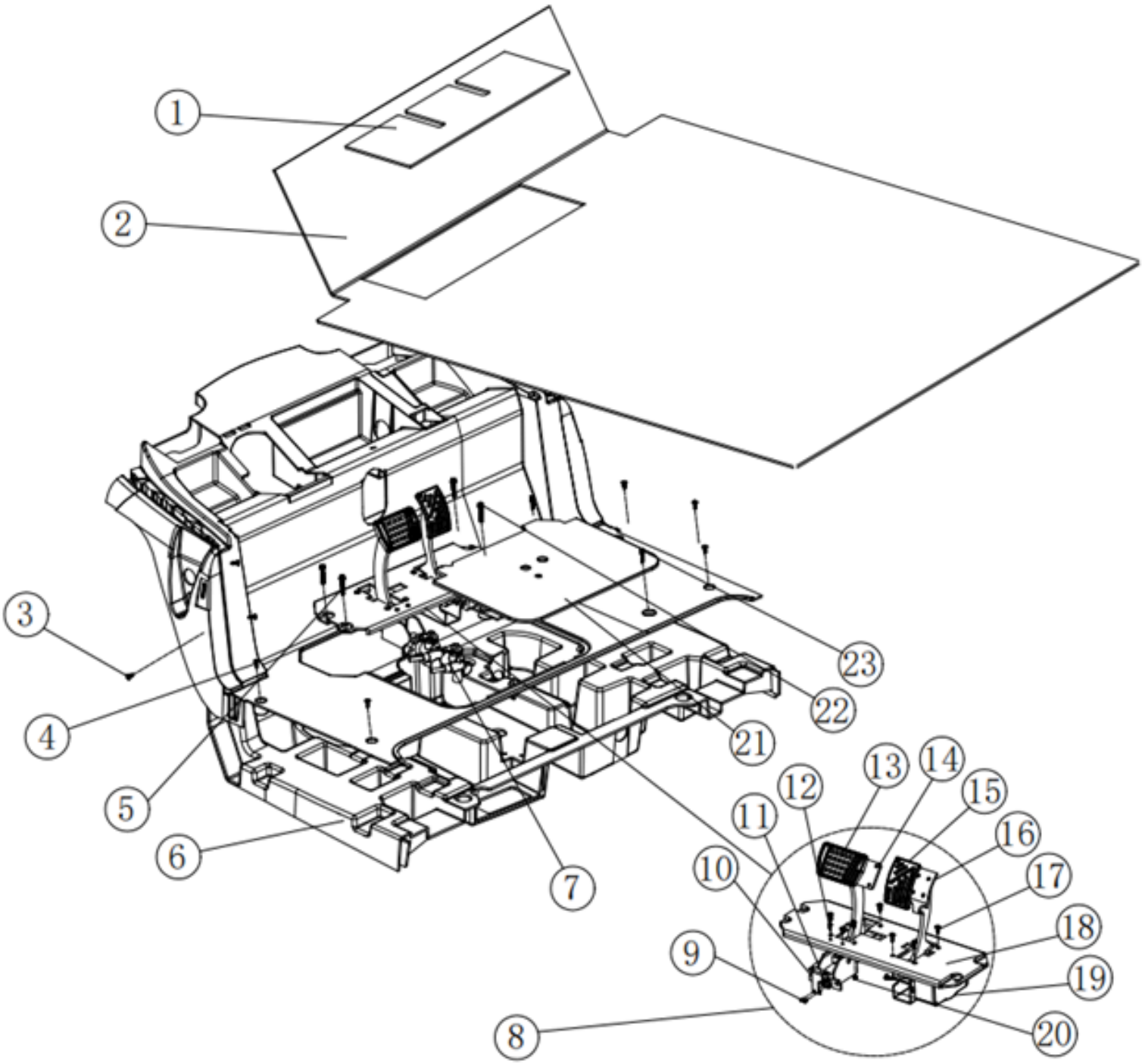

FRONT UNDERBODY PARTS

NO.	DESCRIPTION	PART NUMBER	PCS	MEMO
1	Brake Disc Pedal Pad	4.02.02.10.064	1	294*128
2	Floor Mat	4.05.01.19.002	1	
3	Plastic Nail C633	4.05.04.05.006	2	
4	Inner Hexagon Self Drilling Screw 6.3*60	4.03.03.12.030	8	
5	Hex Self-Tapping Screw M8-12*50	4.03.02.06.023	2	
6	Front Pedalbox Support	4.05.01.01.002	1	A Type
7	Master Cylinder	4.02.05.01.018	1	ZY01-3503010
8	Brake Disc Pedal Assembly	*FULL ASSEMBLY*	1	BN
9	Pan Head Cross Self-Tapping Screw/M3*10	4.03.03.01.011	2	
10	Brake Pedal Assembly Switch Bracket	*FULL ASSEMBLY*	1	
11	Micro Switch	4.04.02.01.060	1	
12	Stainless Steel Hexagon Socket Countersunk Head Screw M5*16	4.03.03.03.074	2	
13	(STOP) Braking Pedal Pad	4.02.02.08.008	1	
14	Brake Pedal	4.02.02.11.002	1	BN Model
15	(GO) Accelerator Pedal Pad	4.02.02.08.010	1	A Type
16	Accelerator Pedal	4.02.02.11.004	1	BN Model
17	304 Hexagonal Countersunk Head Machine Nail M6*20	4.03.03.03.066	8	
18	Brake Pedal Base	4.02.02.11.001	1	No Parking Brake Pedal

FRONT UNDERBODY PARTS DIAGRAM CONTINUED

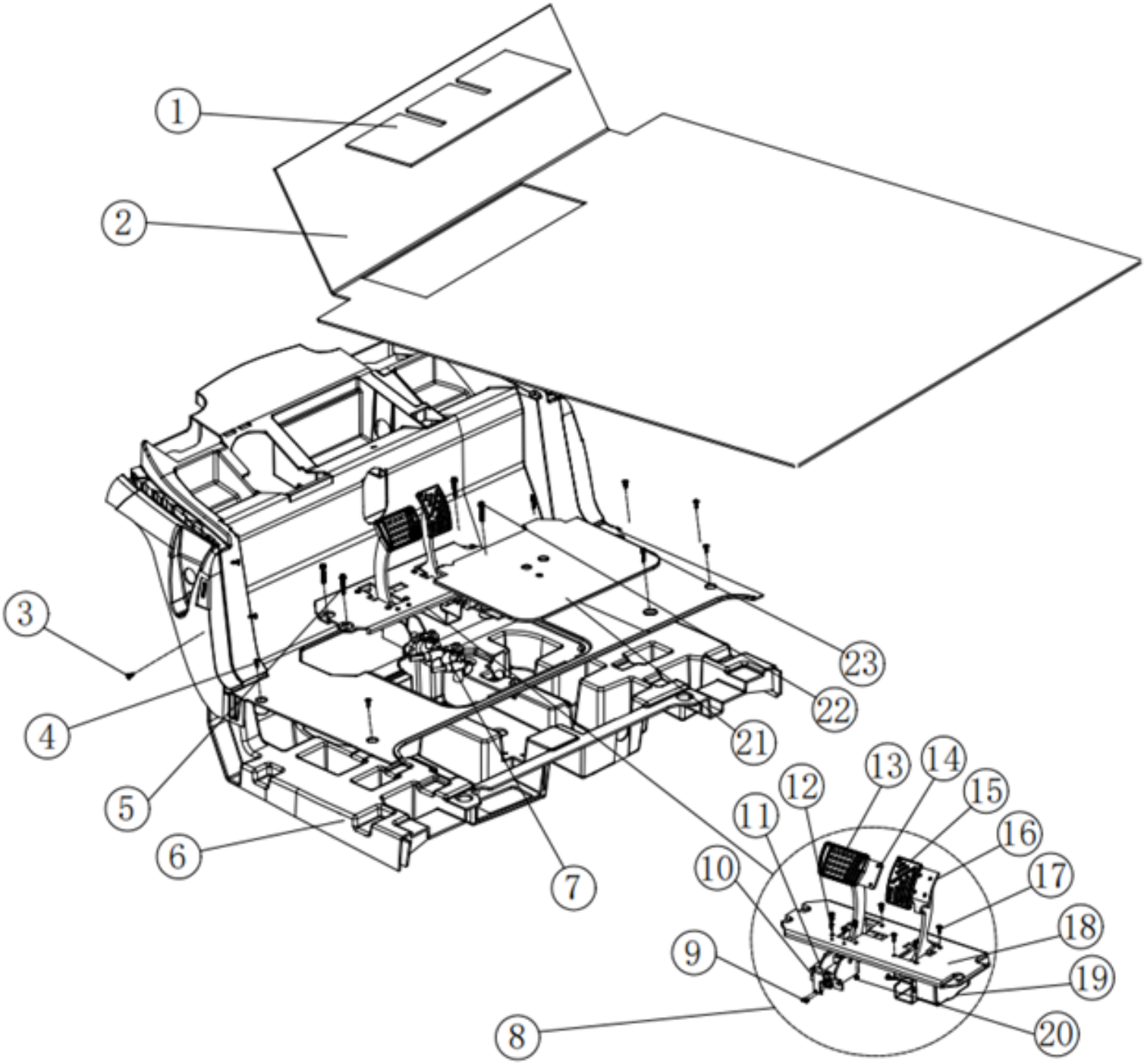

FRONT UNDERBODY PARTS CONTINUED				
NO.	DESCRIPTION	PART NUMBER	PCS	MEMO
19	Accelerator	2.01.02.02.003	1	
20	Lock Nut M6*1.25	4.03.04.01.001	8	
21	Pedal Base Lid	4.05.01.01.010	1	Type A
22	Self-Tapping Screw M8-12*70	4.03.02.06.025	2	
23	Inner Hexagon Self Drilling Screw 6.3*60	4.03.03.12.030	4	

REAR BODY PANEL PARTS DIAGRAM

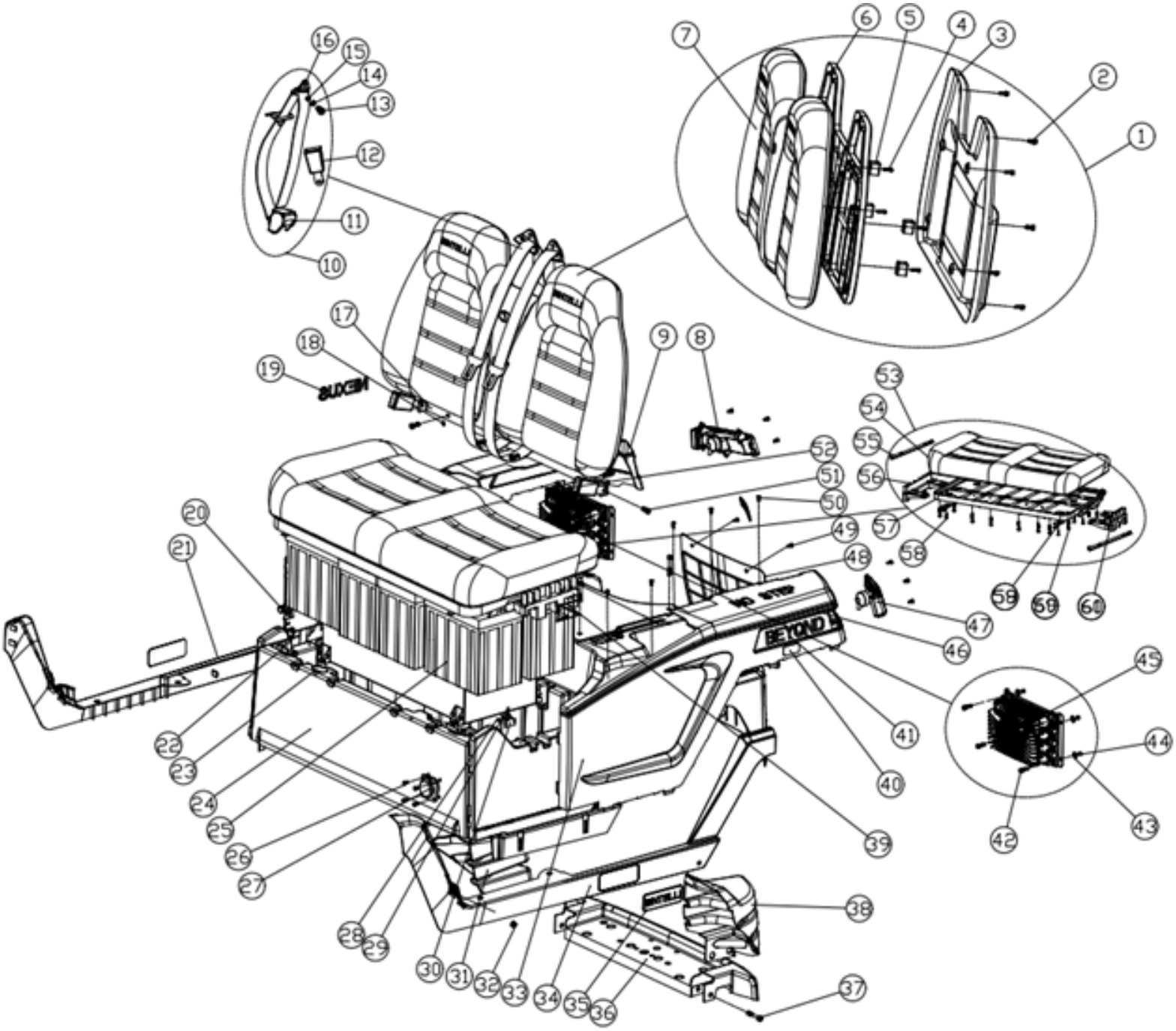

REAR BODY PANEL PARTS

NO.	DESCRIPTION	PART NUMBER	PCS	MEMO
1	Beyond Backrest Assembly/A60	*FULL ASSEMBLY*	1	
2	Flange Screws M6*20	4.03.02.01.004	8	
3	Beyond Backrest Base/A60	*FULL ASSEMBLY*	1	
4	Hexagonal Large Flat Head Self-Tapping Nail/ M5*16	4.03.03.06.024	4	
5	A60 Backrest Internal Mounting Tube/Aluminum	*FULL ASSEMBLY*	4	
6	A60 Backrest Rubber Frame	*FULL ASSEMBLY*	1	
7	Backrest Assembly/A60	2.01.03.02.010	1	
8	Rear Light / RH	4.04.14.01.005	1	
9	Rear Quarter Panel / RH	4.05.01.33.024-OceanBlue 4.05.01.33.024-NavyBlue 4.05.01.33.024-'25Orange 4.05.01.33.024-HydroBlue 4.05.01.33.024-Mint 4.05.01.33.024-Red 4.05.01.33.024-White 4.05.01.33.024-Titanium 4.05.01.33.024-PearlBlack	1	
10	Complete 3pt Seatbelt	4.05.01.16.004	2	
11	Seatbelt Retractor	4.05.01.16.013	2	
12	Seatbelt Lock	4.05.01.16.012	2	
13	Flange Screws M8*55	4.03.02.01.021	2	
14	Flat Washer M8*24*2	4.03.05.03.005	4	
15	Seatbelt Aluminum Gasket	3.04.02.003	4	
16	Seatbelt Anchor	4.05.01.16.014	2	
17	Seat Belt Mounting Bracket/935MM	3.02.01.01.048	1	M Type
18	Seatbelt Washer	3.02.01.01.096	1	
19A	Rear Quarter Panel Logo/Black	4.05.03.01.055-Black	1	
19B	Rear Quarter Panel Logo/White	4.05.03.01.056-White	1	
20	72V 165AH lithium battery	**NOT A SPARE PART**	1	

REAR BODY PANEL PARTS DIAGRAM CONTINUED

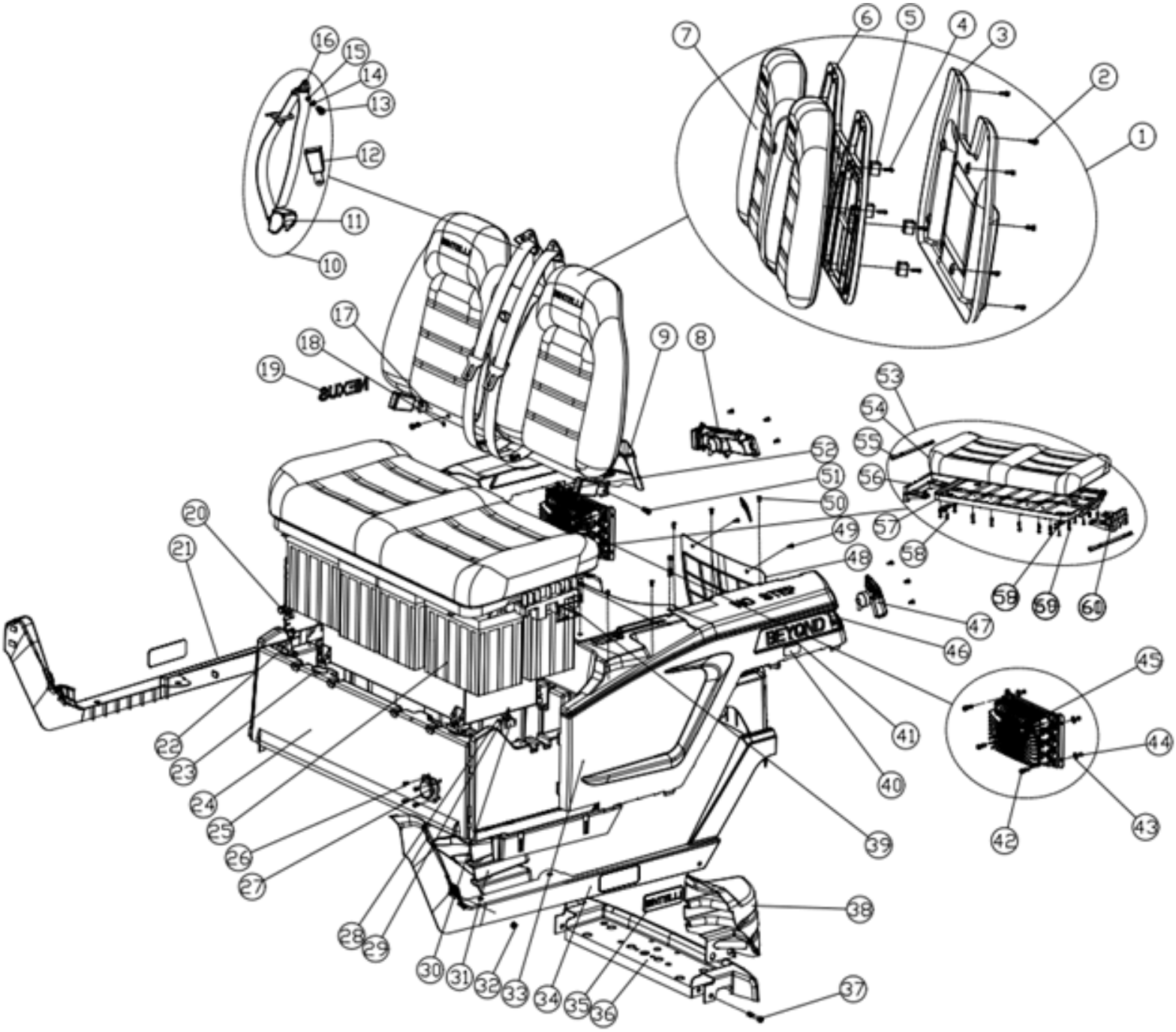

REAR BODY PANEL PARTS CONTINUED

NO.	DESCRIPTION	PART NUMBER	PCS	MEMO
21	Rear Retainer / RH	4.05.01.33.026	1	M Type
22	M-Seat Buckle (Lower)	3.05.40.0106	2	M Type
23	Seat Pads/3MM	4.05.04.02.015	6	3 MM
24	Rear Underbody	4.05.01.33.022	1	
25	48V 165AH Lithium Battery	**NOT A SPARE PART**	1	
26	Internal Hexagonal Round Head Screw M6*60	4.03.03.03.064	4	
27	Charging Socket	M20.22.08.9535	1	
28	Inner Hexagon Large Flat Head Self-Tapping Screws M5*16/Black	4.03.03.15.038	2	
29	Tow/Run Switch	4.04.02.01.009	1	125-250
30	Tow/Run Switch Support	3.02.01.33.146	1	
31	Rear Body Panel Reinforcement /RH	4.05.01.01.017	1	
32	Lock Nut M8*1.25	4.03.04.01.003	4	
33	Rear Quarter Panel / LH	4.05.01.33.023-OceanBlue 4.05.01.33.023-NavyBlue 4.05.01.33.023-'25Orange 4.05.01.33.023-HydroBlue 4.05.01.33.023-Mint 4.05.01.33.023-Red 4.05.01.33.023-White 4.05.01.33.023-Titanium 4.05.01.33.023-PearlBlack	1	
34	Rear Retainer / LH	4.05.01.33.027	1	M Type
35	Logo (Side)	4.05.03.01.030	2	
36	Rear Liner	4.05.01.01.012	1	
37	Flange Screws M8*85	4.03.02.01.026	4	
38	Rear Body Panel Reinforcement / LH	4.05.01.01.016	1	
39	Closing Panel	4.05.01.33.031	1	
40	Body Reflective Stickers	4.09.05.031	4	

REAR BODY PANEL PARTS DIAGRAM CONTINUED

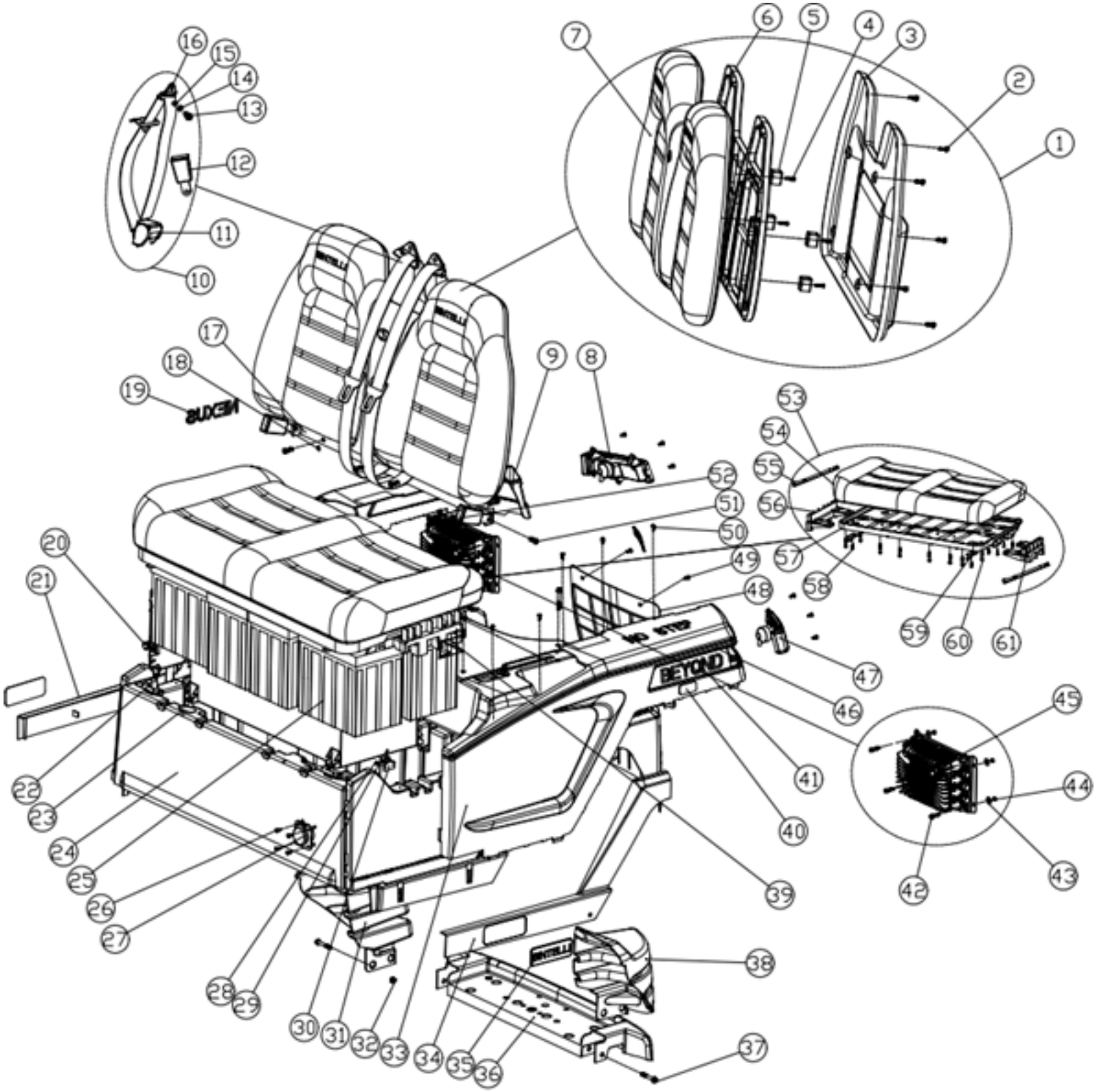

REAR BODY PANEL PARTS CONTINUED

NO.	DESCRIPTION	PART NUMBER	PCS	MEMO
41A	Rear Quarter Panel Logo/Black	4.05.03.01.055-Black	1	
41B	Rear Quarter Panel Logo/White	4.05.03.01.056-White	1	
42	Flange Screws M6*16	4.03.02.01.003	4	
43	Flat M6*18*1.5 Washer	4.03.05.03.010	4	
44	Lock Nut M6*1.25	4.03.04.01.001	4	
45	Onboard Charger	*NOT A SPARE PART*	1	
46	Door Belt Sticker	4.05.03.01.040	2	
47	Rear Light / LH	4.04.14.01.004	1	
48	Access Panel	4.05.01.33.025	1	
49	Plastic Nail C633	4.05.04.05.006	2	
50	Inner Hexagon Large Flat Head Self-Tapping Screws M5*16	4.03.03.06.024	6	
51	Flange Screws M8*25	4.03.02.01.015	1	
52	Lock Nut M8*1.25	4.03.04.01.003	1	
53	Beyond Seat Assembly/A60	*FULL ASSEMBLY*	1	
54	Seat Assembly/A60	2.01.03.02.011	1	
55	Strap	4.01.68.008	2	
56	Armrest Base/RH	*FULL ASSEMBLY*	1	M Type
57	Seat Bottom Tray	4.05.01.01.038	1	A Type
58	Inner Hexagon Large Flat Head Self-Tapping Screws M5*16/ Black Dacromet	4.03.03.15.038	1	
59	M-Seat Buckle (Upper)	3.05.40.0105	2	
60	Flange Screws M6*20	4.03.02.01.004	10	
61	Armrest Base/LH	*FULL ASSEMBLY*	1	M Type

BACKWARD SEAT PARTS DIAGRAM

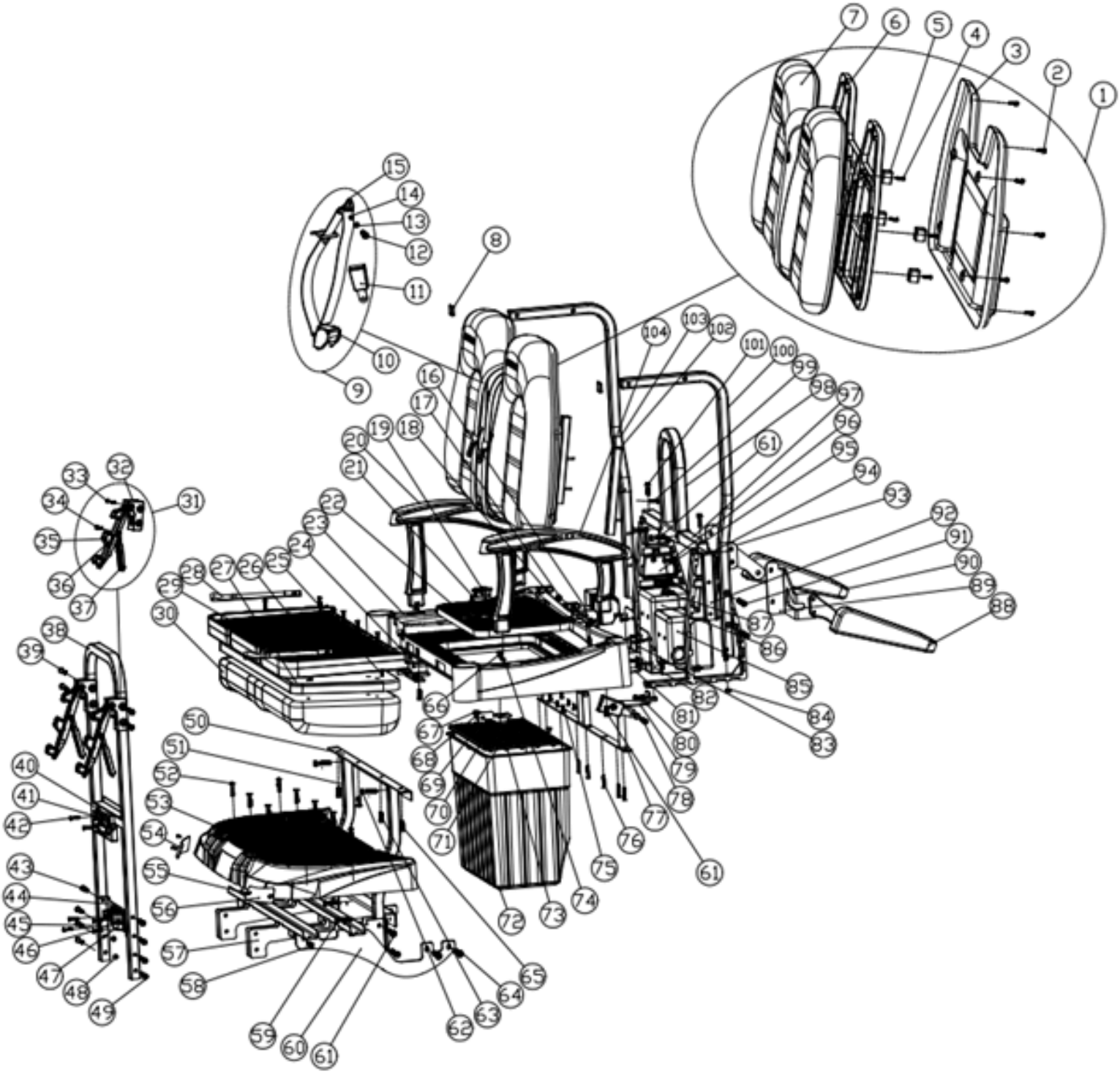

BACKWARD SEAT PARTS

NO.	DESCRIPTION	PART NUMBER	PCS	MEMO
1	Beyond Backrest Assembly/A60	*FULL ASSEMBLY*	1	
2	Flange Screws M6*20	4.03.02.01.004	8	
3	Beyond Backrest Base/A60	*FULL ASSEMBLY*	1	
4	Hexagonal Large Flat Head Self-Tapping Nail/ M5*16	4.03.03.06.024	4	
5	A60 Backrest Internal Mounting Tube/Aluminum	*FULL ASSEMBLY*	4	
6	A60 Backrest Rubber Frame	*FULL ASSEMBLY*	1	
7	Backrest Assembly/A60	2.01.03.02.010	1	
8	Pipe Plug 30*30	4.05.04.03.055	2	
9	Complete 3pt Seatbelt	4.05.01.16.004	2	
10	Seatbelt Retractor	4.05.01.16.013	2	
11	Female Seat Belt	4.05.01.16.006	2	
12	Flange Screws M8*55	4.03.02.01.021	2	
13	Flat Washer M8*24*2	4.03.05.03.005	4	
14	Seatbelt Aluminum Gasket	3.04.02.003	4	
15	Seatbelt Anchor	4.05.01.16.014	2	
16	New Reverse Kit Seat Belt Transfer Plate	3.02.01.05.087	1	
17	Screw Flange M8*20	4.03.02.01.014	4	
18	Storage Box Cover Piece W/Hardware	4.05.01.42.003	4	
19	Reverse Kit Cooler Latch	4.01.43.074	1	
20	New Reverse Kit Plastic Armrest RH	4.05.01.42.009	1	M Type
21	Cross Pan Head Machine Nail 5*10	4.03.03.08.025	2	
22	New Reverse Kit Flip Board Lid	4.05.01.42.002	1	
23	New Reverse Kit Plastic Fixed Base	4.05.01.42.011	1	

BACKWARD SEAT PARTS DIAGRAM CONTINUED

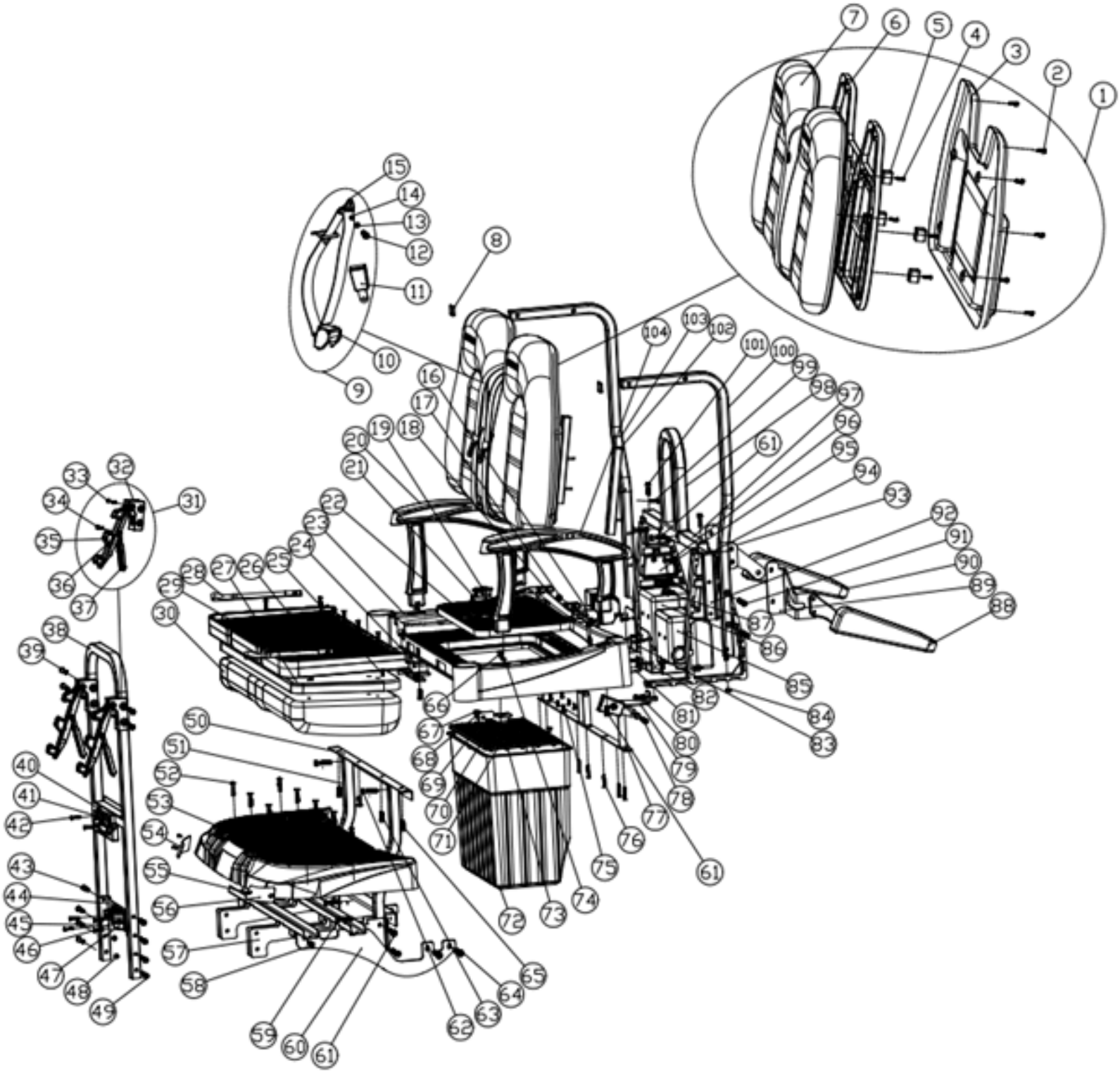

BACKWARD SEAT PARTS CONTINUED

NO.	DESCRIPTION	PART NUMBER	PCS	MEMO
24	New Reverse Kit Metal Fixed Plate LH	3.02.01.05.069	1	
25	Flange Screws M6*16	4.03.02.01.003	2	
26	Countersunk Hexagon Socket Screw M6*40	4.03.03.03.033	8	
27	Rear Seat Base	4.05.01.07.03.005	1	
28	Strap	4.01.68.008	2	
29	New Reverse Kit Flip Board	4.05.01.42.005	1	
30	Flip Seat	4.05.01.07.03.007	1	
31	Beach Seat Holder Assembly	2.01.01.01.019	1	
32	Beach Seat Holder Base	4.05.01.18.008	2	
33	Flange Screws M6*55	4.03.02.01.011	2	
34	Flange Screws M6*35	4.03.02.01.007	2	
35	Lock Nut M6*1.25	4.03.04.01.001	4	
36	Beach Seat Holder Movable Part	4.05.01.18.009	2	
37	Beach Seat Holder Support	4.05.01.18.010	2	
38	New Reverse Kit Caddie Plate Rail	3.02.01.05.073	1	BN Model
39	Flange Screws M8*55	4.03.02.01.021	4	
40	License Plate Light Bracket	4.05.01.33.076	1	D-AM
41	License Plate Light	4.04.06.12.025	1	15-003
42	Stainless Steel Hexagonal Self-Tapping Screws /M5*25	4.03.03.06.019	2	
43	Flange Screws M8*45	4.03.02.01.019	4	
44	Camera Fixing Plate	3.02.05.01.132	1	
45	Back Up Camera	4.04.07.085	1	

BACKWARD SEAT PARTS DIAGRAM CONTINUED

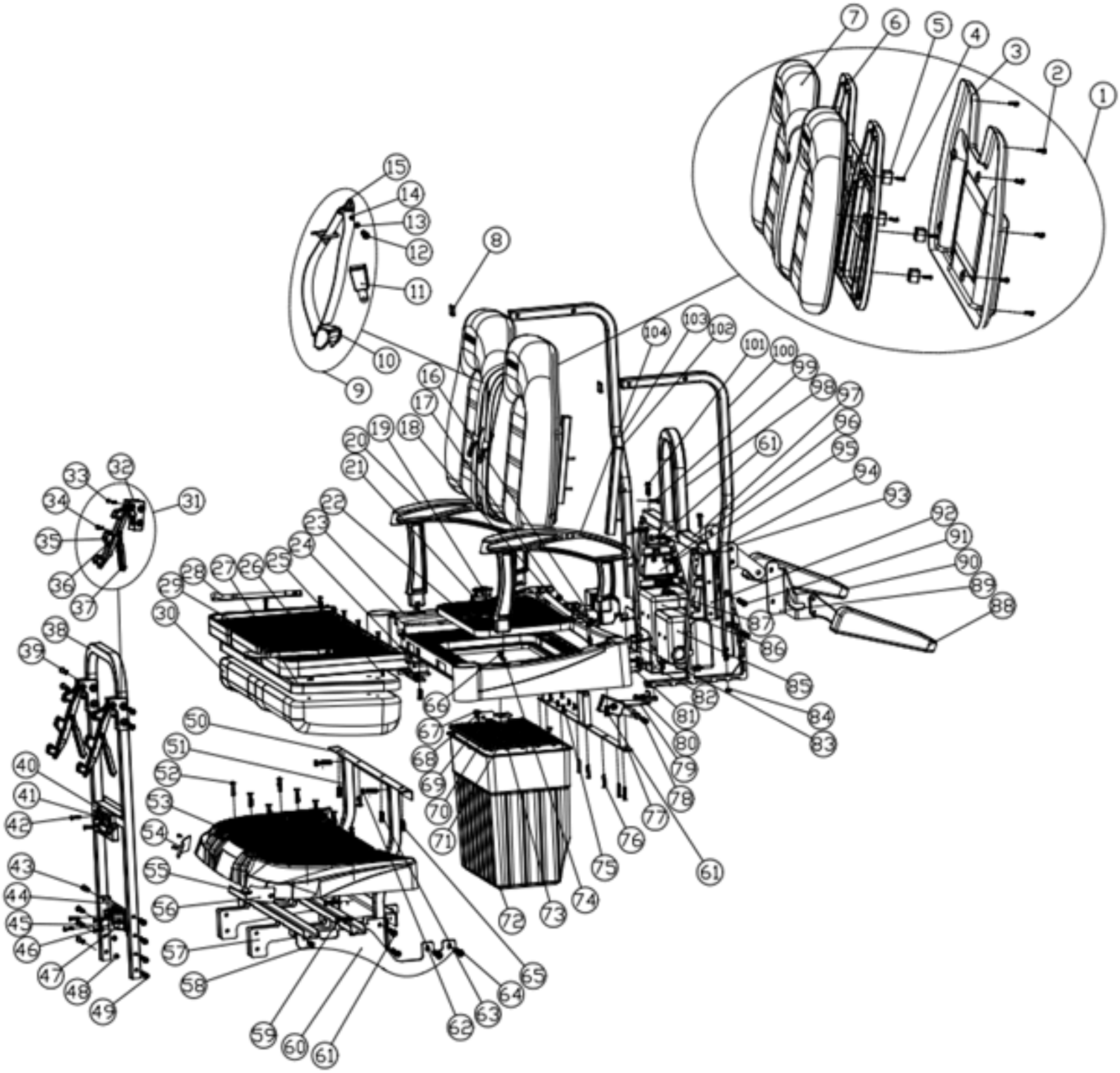

BACKWARD SEAT PARTS CONTINUED

NO.	DESCRIPTION	PART NUMBER	PCS	MEMO
46	Flange Screws M6*20	4.03.02.01.004	4	
47	New Back Up Camera Bracket	4.05.01.42.021	1	
48	Lock Nut M8*1.25	4.03.04.01.003	4	
49	Flange Screws M8*50	4.03.02.01.020	4	
50	Reverse Kit Fixed Support Frame Pinboard	3.02.01.05.068	1	
51	New Reverse Kit Fixed Base Support Frame Assembly	3.02.01.05.071	1	
52	Countersunk Hexagon Socket Screw M8*40	4.03.03.03.035	10	
53	New Reverse Kit Caddie Plate	4.05.01.42.001	1	
54	Caddie Plate Reflective Stickers	4.09.05.031	1	Set
55	Cross Self-Tapping Screws M4*16	4.03.03.07.012	4	
56	Caddie Plate Reflective Stickers	4.09.05.031	1	Set
57	New Reverse Kit Caddie Plate Support Assembly	3.02.01.05.072	1	
58	Flange Screws M8*25	4.03.02.01.015	4	
59	Flange Screws M6*65	4.03.02.01.082	2	
60	New Reverse Kit Lock Plate Support for Caddie Plate	3.02.01.05.082	1	
61	Flange Screws M6*65	4.03.02.01.082	4	
62	Flange Screws M8*45	4.03.02.01.019	2	
63	Countersunk Hexagon Socket Screw M8*30	4.03.03.15.024	2	
64	Flange Screws M8*85	4.03.02.01.026	4	
65	Countersunk Hexagon Socket Screw M8*40	4.03.03.03.035	4	
66	Countersunk Head Screw Cover	4.05.04.09.033	4	

BACKWARD SEAT PARTS DIAGRAM CONTINUED

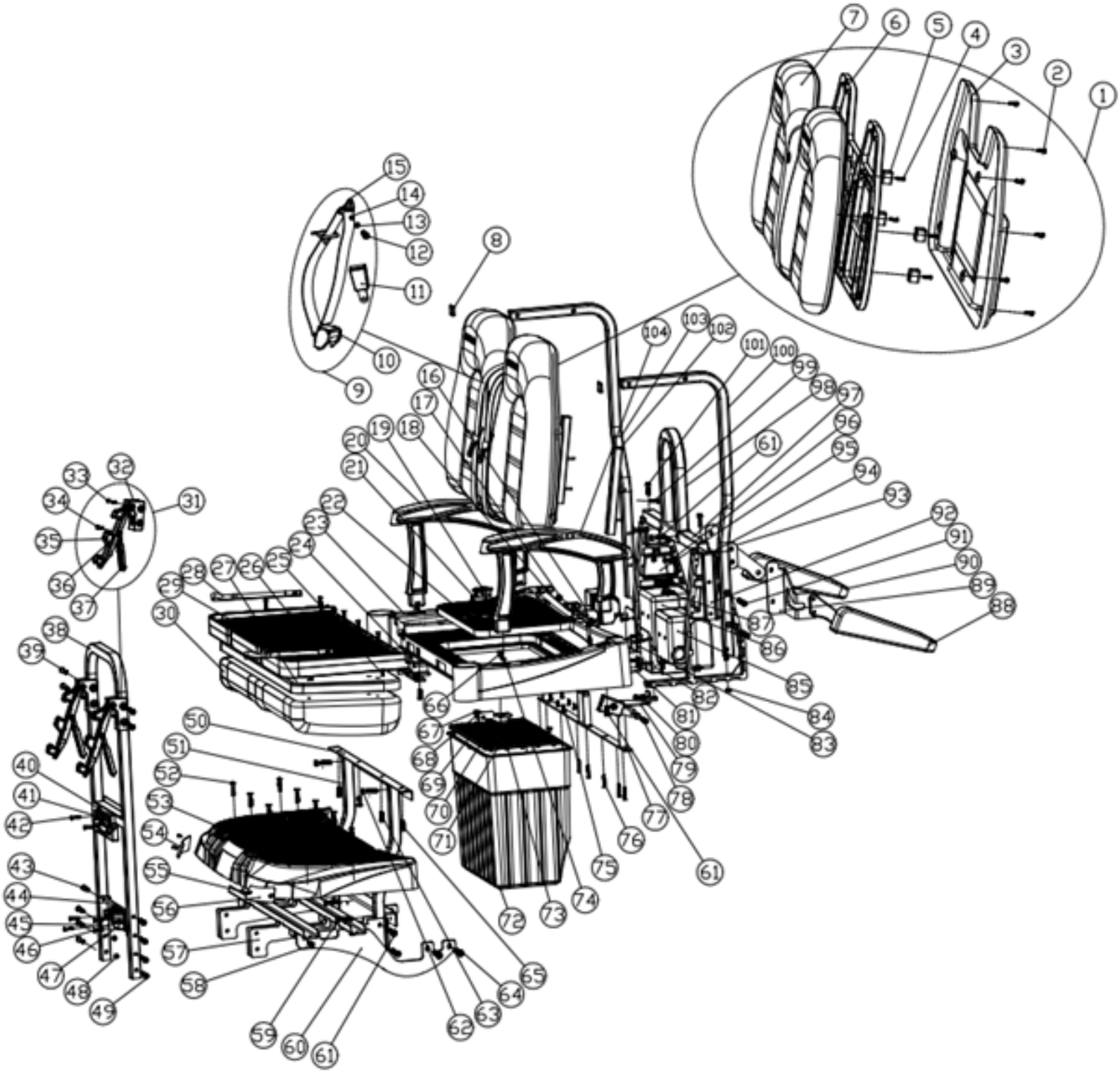

BACKWARD SEAT PARTS CONTINUED

NO.	DESCRIPTION	PART NUMBER	PCS	MEMO
67	304 Hexagonal Locking Nut M10	4.03.04.04.017	2	
68	New Reverse Kit Stainless Flip Board Bush	3.11.01.01.030	2	
69	New Reverse Kit Metal Fixed Plate RH	3.02.01.05.070	1	
70	Outer Hexagon Bolt M10*45	4.03.03.04.043	2	
71	New Reverse Kit Flip Board Lid	4.05.01.42.002	1	
72	New Reverse Kit Storage Box	4.05.01.42.004	1	
73	Flange Screws M8*30	4.03.02.01.016	2	
74	Flat Washer M8*24*2	4.03.05.03.005	4	
75	Inner Hexagon Large Flat Head Self-Tapping Screws M5*25	4.03.03.15.040	8	
76	Inner Hexagon Large Flat Head Self-Tapping Screws M5*25	4.03.03.15.040	8	
77	New Reverse Kit Seat Belt Fixed Plate	3.02.01.05.067	1	
78	Flange Screws M8*20	4.03.02.01.014	2	
79	New Reverse Kit Plastic Fixed Base Junction Plate RH	3.02.01.05.065	1	
80	Flange Screws M8*35	4.03.02.01.017	2	
81	New Reverse Kit Plastic Fixed Base Junction Plate LH	3.02.01.05.066	1	
82	N/A	N/A	1	BN
83	N/A	N/A	1	BN
84	Steering Assembly Spacer 10mm	3.04.01.002	4	
85	N/A	N/A	1	BN

BACKWARD SEAT PARTS DIAGRAM CONTINUED

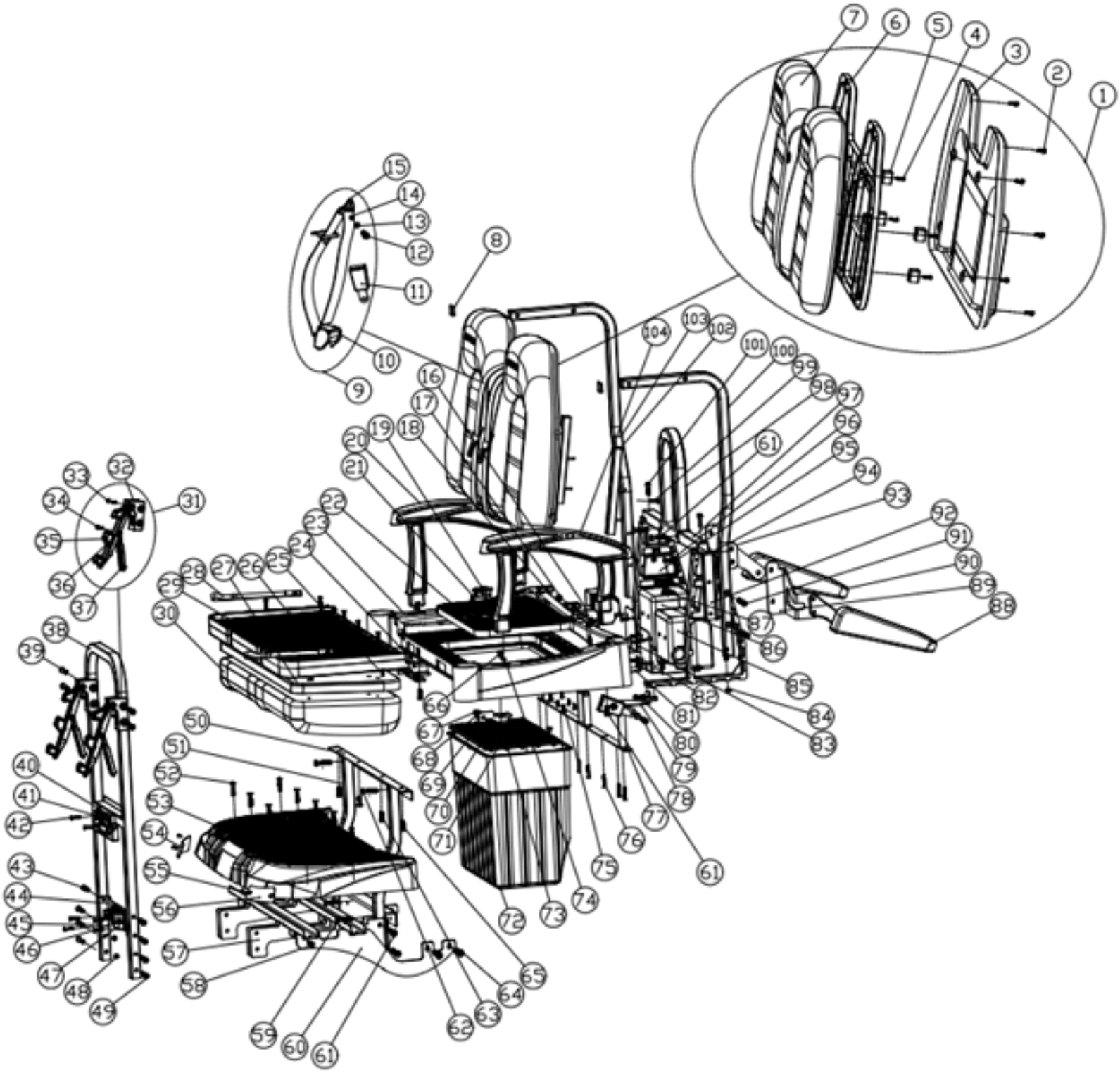

BACKWARD SEAT PARTS CONTINUED

NO.	DESCRIPTION	PART NUMBER	PCS	MEMO
86	N/A	N/A	1	
87	Countersunk hexagon socket screw M6*30	4.03.03.03.032	2	
88	Foldable Armrest RH	4.05.01.33.136	1	M Type
89	Rear Armrest Adapter Board/RH	*FULL ASSEMBLY*	1	M Type
90	Foldable Armrest LH	4.05.01.33.135	1	M Type
91	Flange Screws M8*75	4.03.02.01.047	4	
92	Roof Rear Support Spacer RH (Anti Squeak)	4.05.01.42.032	1	
93	Rear Armrest Adapter Board/LH	*FULL ASSEMBLY*	1	M Type
94	New Reverse Kit Alum Rear Supporting Seat-RH	3.02.01.33.138	2	
	New Reverse Kit Alum Rear Supporting Seat-LH	3.02.01.05.063		
95	Roof Rear Support Spacer LH (Anti Squeak)	4.05.01.42.031	1	
96	Flange Screws M6*25	4.03.02.01.005	2	
97	New Reverse Kit Seatbelt Fixed Tube	3.02.01.05.086	1	
98	Rear Flip Seat Safety Belt U-Tube/Iron	3.02.01.01.023	1	
99	Flange Screws M6*40	4.03.02.01.008	2	
100	Roof Rear Support/RH	3.02.01.05.084	1	
101	Flange Screws M8*50	4.03.02.01.020	2	
102	Beyond Rear Seat Brackets	*FULL ASSEMBLY*	2	
103	Roof Rear Support/LH	3.02.01.05.083	1	
104	Foldable Seat Side Armrest/LH/M Model	*FULL ASSEMBLY*	1	M Type

FOUR WHEEL DISC BRAKE PARTS DIAGRAM

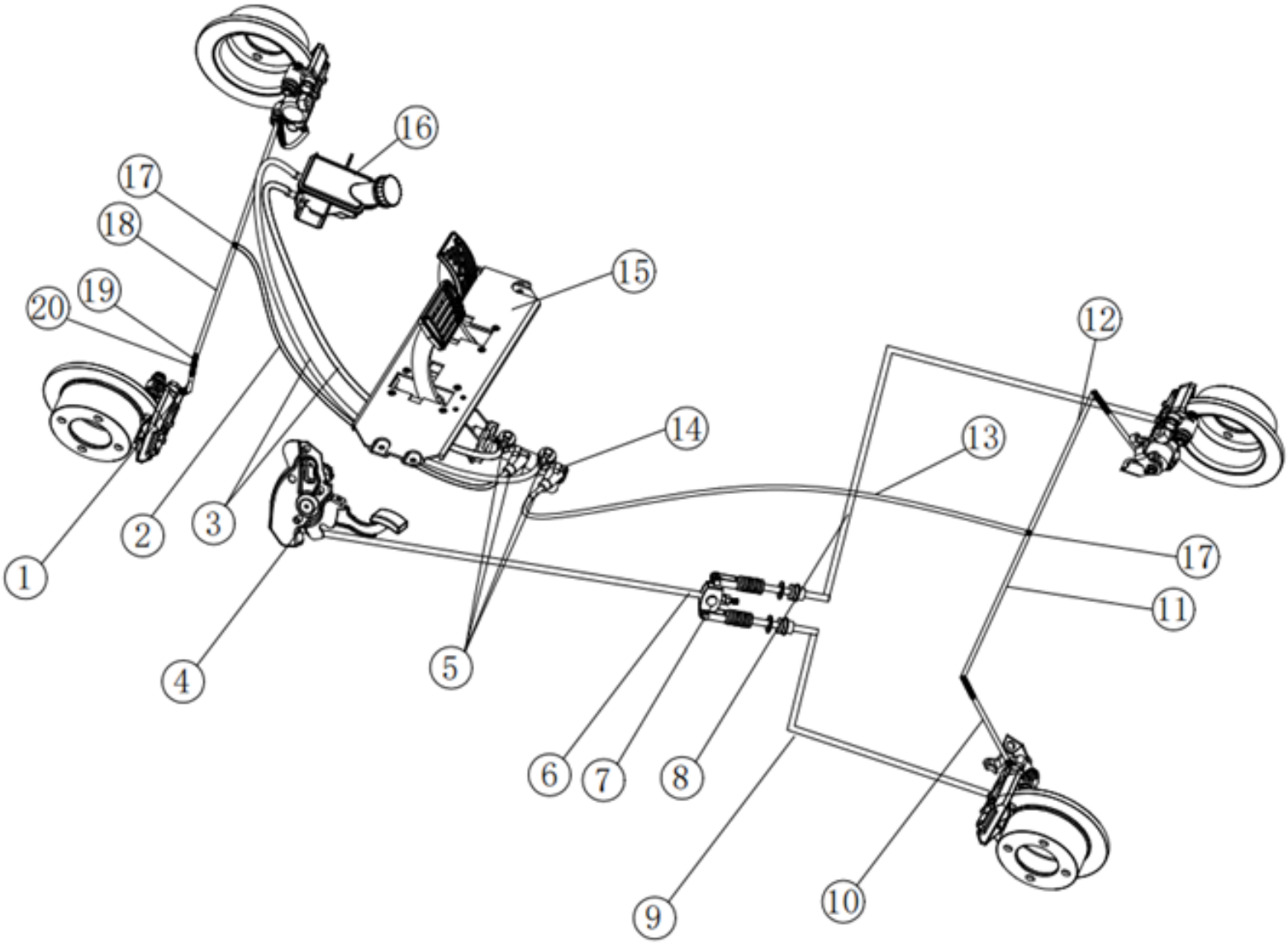

FOUR WHEEL DISC BRAKE PARTS DIAGRAM

NO.	DESCRIPTION	PART NUMBER	PCS	MEMO
1	Front Hose L-380	4.02.02.10.054	2	
2	Front Brake Pipe L-700	4.02.02.10.050	1	
3	Oil Pipe 8*1.8m	4.02.02.12.020	1	
4	Brake Pedal Assembly	4.02.13.02.003	1	
5	Knot 10-16	4.02.02.12.010	4	
6	Front Parking Brake Cable	4.02.02.03.010	1	
7	Brake Cable Screw Accessory	4.02.02.01.016	1	
8	Rear Parking Brake Cable	4.02.02.03.011	1	
9	Rear Parking Brake Cable	4.02.02.03.011	1	
10	Rear Hose L-300	4.02.02.10.049	2	
11	Brake Pipe 24.5in	4.02.02.10.060	1	
12	Rear Hose L-850	4.02.02.10.059	1	
13	Brake Pipe 32in	4.02.02.10.057	1	AH2
14	Master Cylinder	4.02.05.01.018	1	ZY01-3503010
15	Brake Pedal Base	4.02.02.11.001	1	BN Model
16	Brake Reservoir	4.05.04.07.004	1	
17	Three-Way Valve	4.02.02.12.011	2	
18	Front Brake Pipe	4.02.02.12.001	2	
19	Hollow Screw M10*25*1.0	4.03.02.09.002	4	
20	Washer	4.02.02.12.007	8	C10 M10x1.0